100 MW WIND FARM DESIGN
F20-25
90% DELIVERABLE DRAWING PACKAGE

3J2LM ENGINEERING

*ALL DRAWINGS ARE PRELIMINARY AND SUBJECT TO CHANGE

TABLE OF CONTENTS

DELIVERABLE	DRAWING NUMBER	DESCRIPTION
7.1	EE-1	PRELIMINARY COLLECTION SYSTEM SINGLE-LINE DIAGRAM
9.1	EE-2	PRELIMINARY SUBSTATION ONE-LINE
9.3	EE-3	PRELIMINARY THREE-LINE BUS AND FEEDERS
9.3	EE-4	PRELIMINARY THREE-LINE MPT
9.1	EE-5	PRELIMINARY GENERAL ARRANGEMENT
7.7	EE-6	JUNCTION BOX DETAILS
9.7	EE-7	SWITCH DETAILS
9.6	EE-8	PRELIMINARY SUBSTATION ELEVATION
9.8	EE-9	PRELIMINARY FEEDER BREAKER DC SCHEMATIC
9.8	EE-10	PRELIMINARY HIGH SIDE BREAKER DC SCHEMATIC
7.2	CIM-1	PRELIMINARY COLLECTION SYSTEM LAYOUT
8.1	CIM-2	PRELIMINARY FOUNDATION PLAN
8.2	CIM-3	PRELIMINARY PLAN VIEW LAYOUT
8.3	CIM-4	SITE DEVELOPMENT SKETCH
8.4	CIM-5	TRENCH LID DRAWING
8.4	CIM-6	PRELIMINARY TRENCH SKETCH
8.2	CIM-7	PLAN VIEW PROFILE
10.18	CIM-8	STRUCTURE LOADING DRAWING
10.19	CIM-9	DEADEND POLE DRAWING
10.19	CIM-10	TANGENT POLE DRAWING

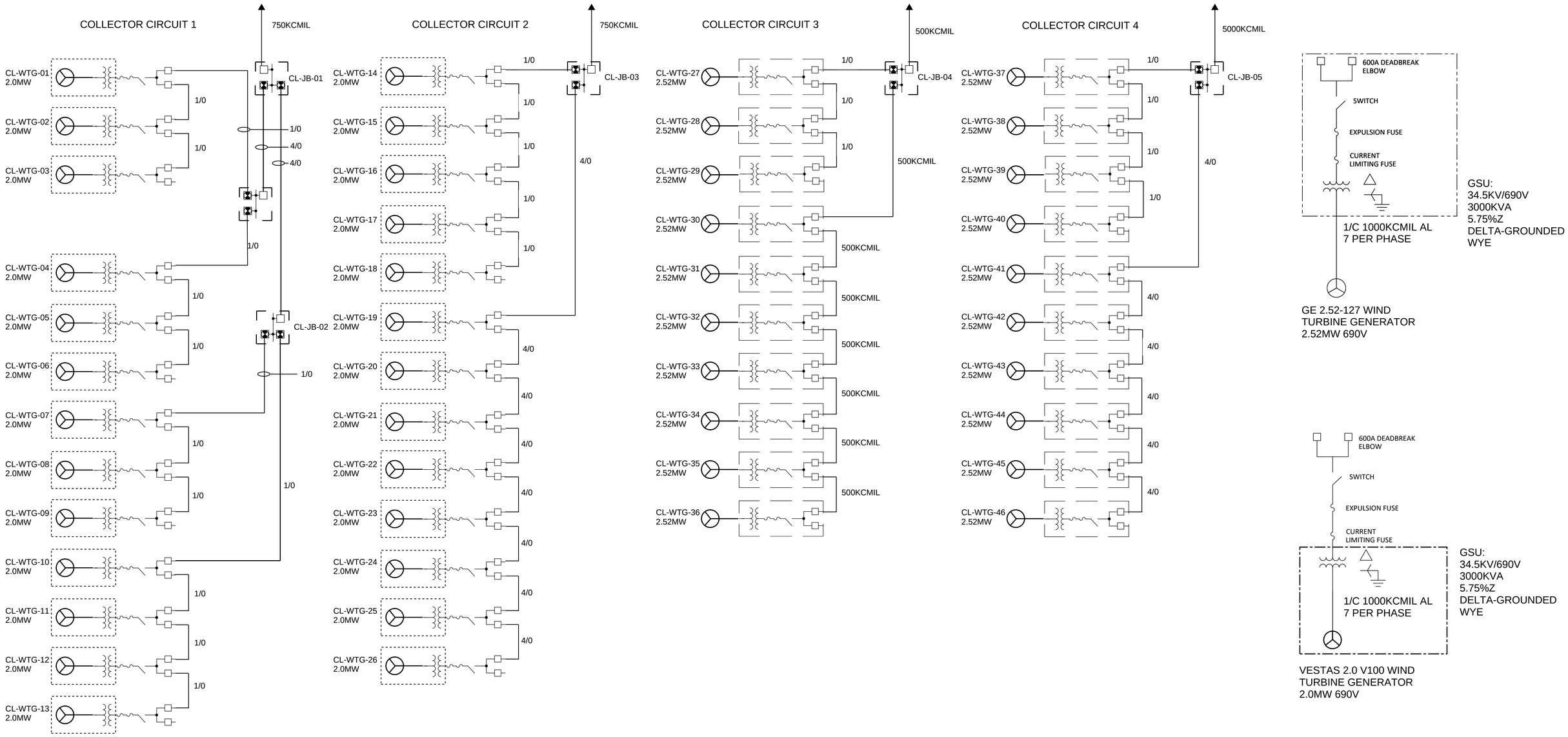

NO	DATE	REVISIONS AND RECORD OF ISSUE	DRN	DES	CHK	PDE	APP	NO	DATE	REVISIONS AND RECORD OF ISSUE	DRN	DES	CHK	PDE	APP

3:2LM ENGINEERING

DESIGNER JM,LM,JRP | DRAWN LM | CHECKED | DATE SS 2021

WIND FARM

PREMIMINARY COLLECTION SYSTEM ONE LINE

PROJECT 100 MW WIND FARM | DRAWING NUMBER EE-1 | REV A

CODE | AREA

90% SUBMITTAL

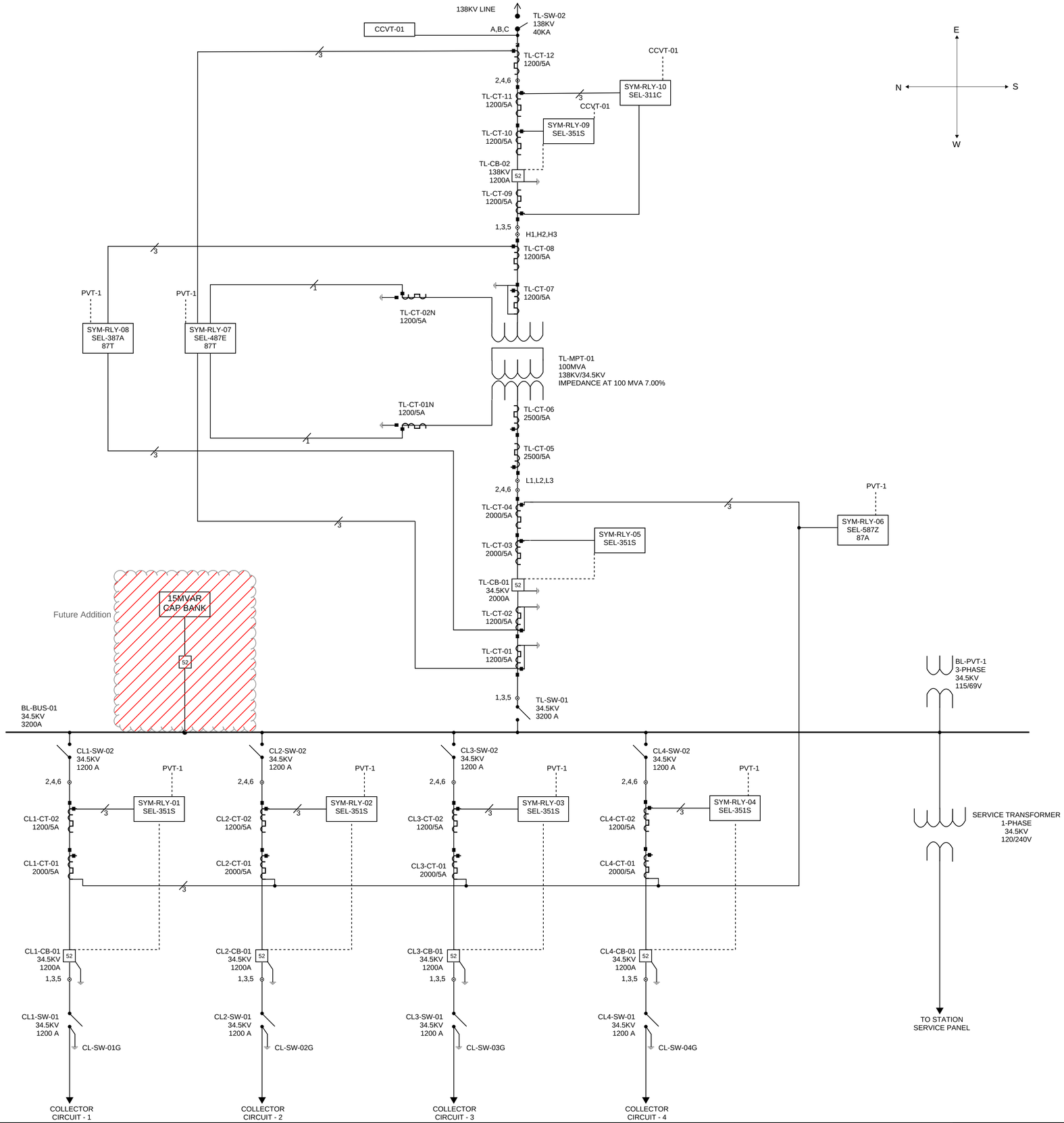

NOTES

1. ALL RATINGS SHOWN ARE PRELIMINARY AND ARE SUBJECT TO CHANGE PENDING DETAILED DESIGN.
2. EQUIPMENT SIZES ARE PRELIMINARY AND WILL BE CONFIRMED DURING DETAILED DESIGN.
3. IN THE EVENT OF TECHNICAL CONFLICTS, ERRORS, OR DISCREPANCIES, THE DETAILED DESIGN REQUIREMENTS, INCLUDING THOSE LISTED IN DESIGN REQUIREMENTS OR SYSTEM SPECIFICATIONS, TAKE PRECEDENCE OVER ANY INFORMATION SHOWN ON THIS DRAWING.

LEGEND

- BUS
- POTENTIAL
- CIRCUIT BREAKER
- DISCONNECT SWITCH
- CURRENT TRANSFROMER
- POWER TRANSFORMER
- STATION SERVICE TRANSFORMER
- VOLTAGE TRANSFORMER

DESIGNATION

CL	COLLECTOR LINE
BL	BUS LINE
TL	TRANSFORMER LINE

RELAY	PROTECTIVE FUNCTION
SEL-351S	50/51P, 50/51G, 50/51N, 27/59, 50BF
SEL-587Z	50/51P, 50/51G, 87T
SEL-487E	50/51P, 50/51G, 50/51N, 27/59, 87T
SEL-387A	50/51P, 50/51G, 50/51N, 87T
SEL-311C	50/51P, 50/51G, 50/51N, 21P, 21G, 68, 27/59, 81U, 81O

NO	DATE	REVISIONS AND RECORD OF ISSUE	DRN	DES	CHK	PDE	APP

NO	DATE	REVISIONS AND RECORD OF ISSUE	DRN	DES	CHK	PDE	APP

3J2LM ENGINEERING

DESIGNER JM,LM,JRP | DRAWN JM | CHECKED | DATE SS 2021

WIND FARM

PRELIMINARY OVERALL ONE LINE DIAGRAM

PROJECT: 100 MW WIND FARM | DRAWING NUMBER: EE-2 | REV: A

CODE | AREA

90% SUBMITTAL

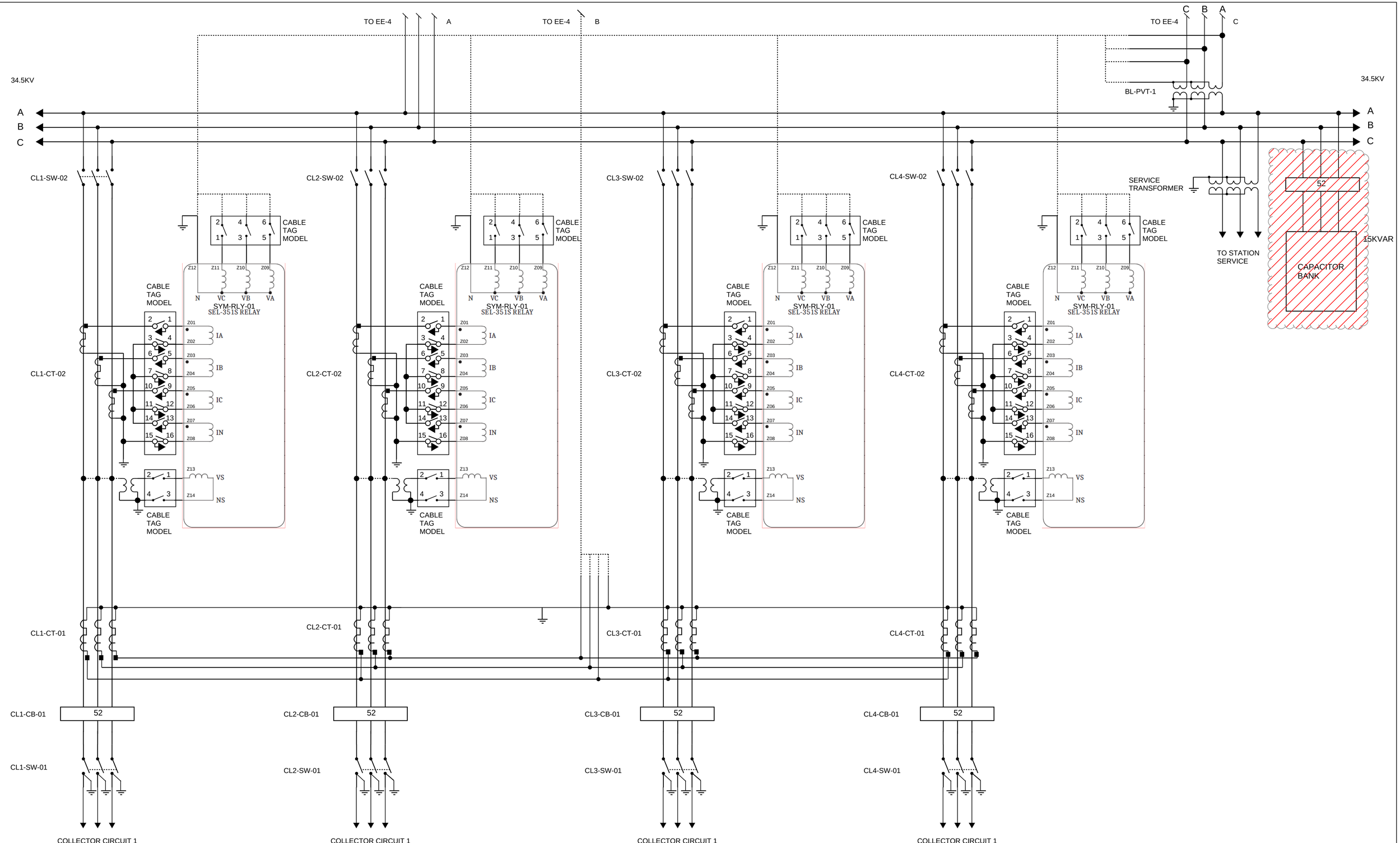

NO	DATE	REVISIONS AND RECORD OF ISSUE	DRN	DES	CHK	PDE	APP	NO	DATE	REVISIONS AND RECORD OF ISSUE	DRN	DES	CHK	PDE	APP

3121LM ENGINEERING

DESIGNER JM,LM,JRP | DRAWN LM | CHECKED | DATE SS 2021

WIND FARM

PREMIMINARY SUBSTATION THREE LINE

PROJECT: 100 MW WIND FARM | DRAWING NUMBER: EE-3 | REV: A

CODE | AREA

90% SUBMITTAL

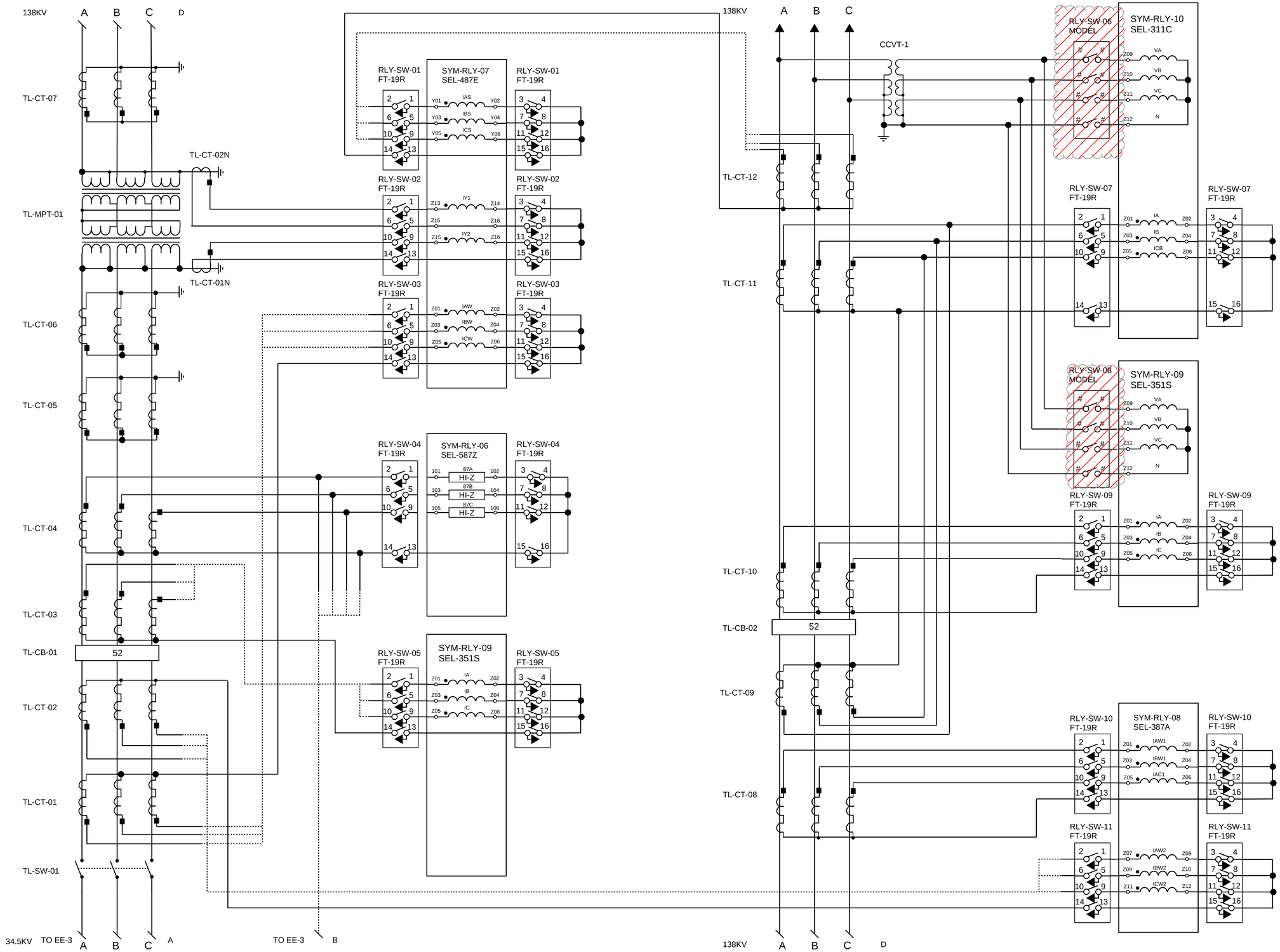

NO	DATE	REVISIONS AND RECORD OF ISSUE	DRN	DES	CHK	PDE	APP

NO	DATE	REVISIONS AND RECORD OF ISSUE	DRN	DES	CHK	PDE	APP

3:21LM ENGINEERING

DESIGNER JM,LM,JRP | DRAWN LM | CHECKED | DATE SS 2021

WIND FARM

PREMIMINARY SUBSTATION THREE LINE

PROJECT: 100 MW WIND FARM

DRAWING NUMBER: EE-4

REV: A

CODE

AREA

90% SUBMITTAL

NOTES:

1. ALL DIMENSIONS SHOWN ARE PRELIMINARY AND SUBJECT TO CHANGE PENDING DETAILED DESIGN

2. IN THE EVENT OF TECHNICAL CONFLICT, ERRORS, OR DISCREPANCIES, THE DETAILED DESIGN REQUIREMENTS INCLUDING THOSE LISTED IN THE DESIGN REQUIREMENTS OR SYSTEM SPECIFICAIONS, TAKE PRECEDENCE OVER ANY INFORMATION SHOWN ON THIS DRAWING.

3. DRAWING IS TO SCALE UP UNTIL THE DRIVEWAY. 25' WAS ADDED TO LENGTH AND WIDTH DIMENSIONS ACCOUNT FOR DRIVEWAY DIMENSIONS.

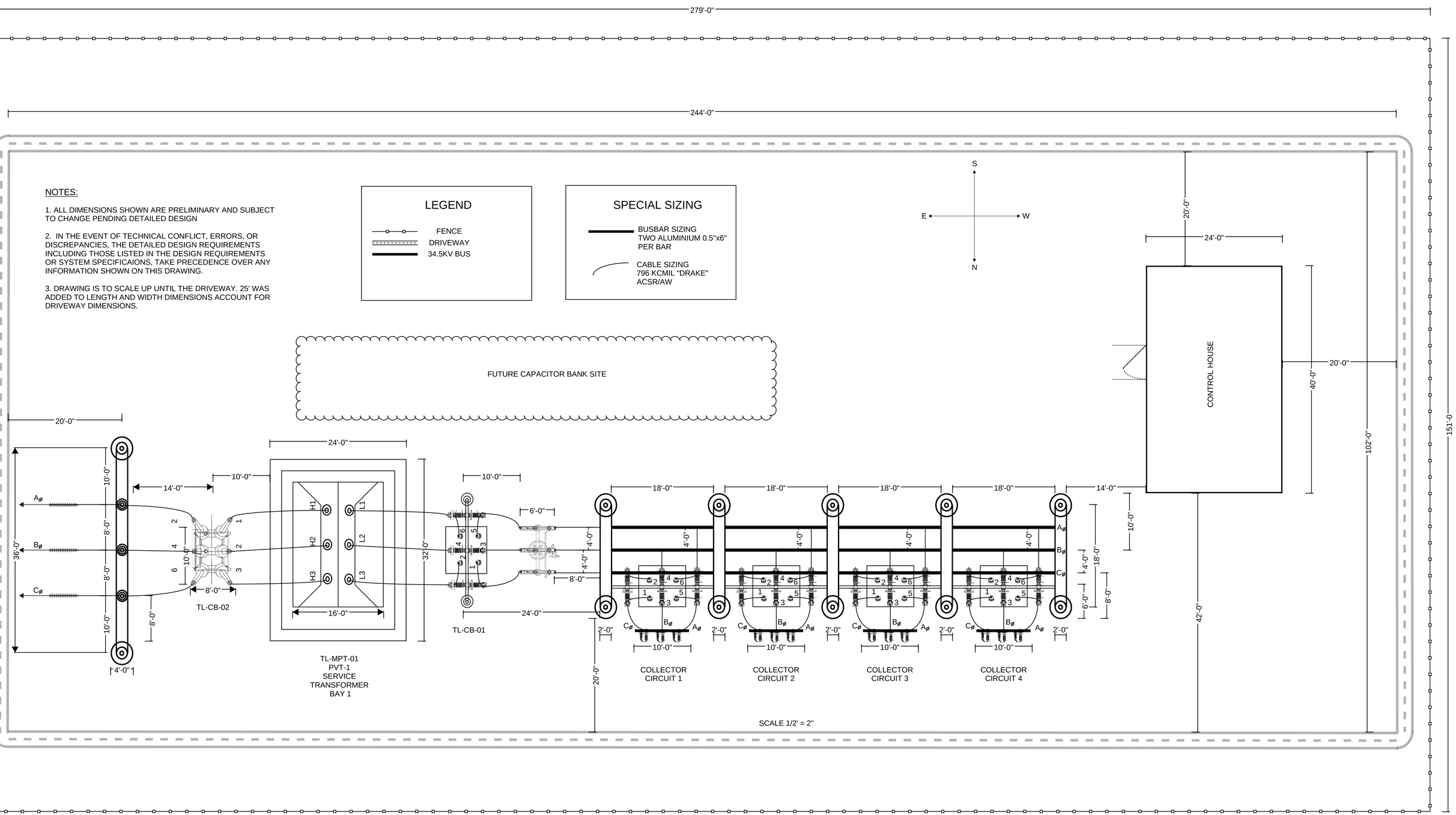

NO	DATE	REVISIONS AND RECORD OF ISSUE	DRN	DES	CHK	PDE	APP	NO	DATE	REVISIONS AND RECORD OF ISSUE	DRN	DES	CHK	PDE	APP

3J2LM ENGINEERING

DESIGNER JM,LM,JRP	DRAWN JM	WIND FARM	PROJECT 100 MW WIND FARM
CHECKED	DATE SS 2021	PRELIMINARY GENERAL ARRANGEMENT	CODE / AREA / 90% SUBMITTAL

DRAWING NUMBER EE-5 REV A

30H x 98W x 30D Sectionalizing Cabinet (For Collection System)

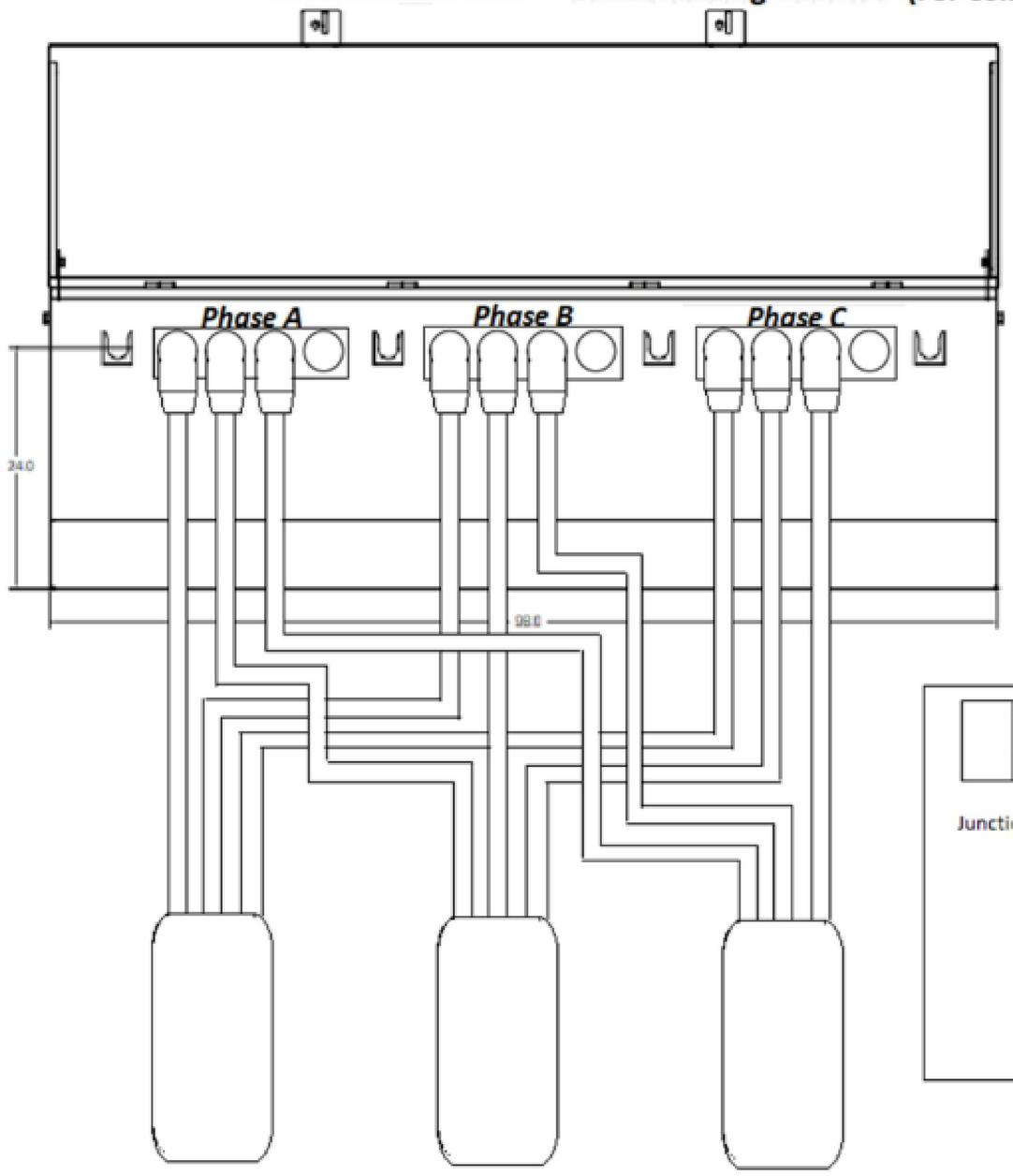

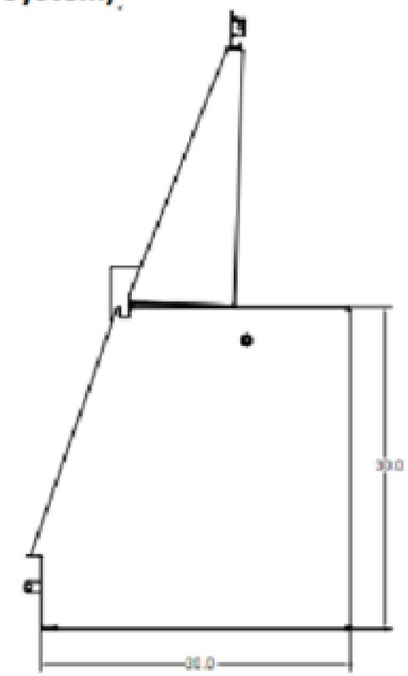

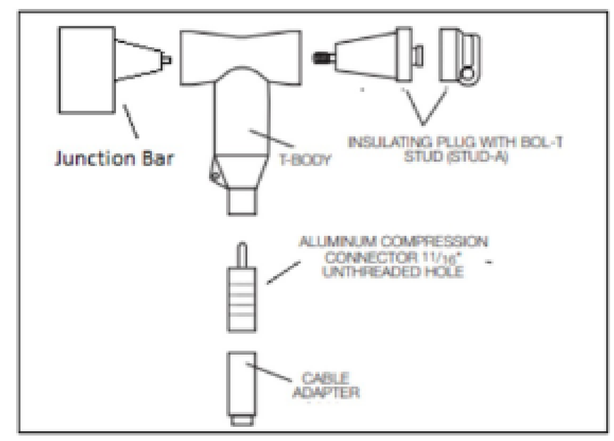

NO	DATE	REVISIONS AND RECORD OF ISSUE	DRN	DES	CHK	PDE	APP

NO	DATE	REVISIONS AND RECORD OF ISSUE	DRN	DES	CHK	PDE	APP

3J2LM ENGINEERING

DESIGNED JM,LM,JP | DRAWN JP

CHECKED | DATE SS 2021

WIND FARM

PRELIMINARY JUNCTION BOX DETAILS

PROJECT: 100 MW WIND FARM

DRAWING NUMBER: EE-6

REV: A

CODE

AREA

90% SUBMITTAL

Power Xpert XGIS (Medium Voltage Switchgear)

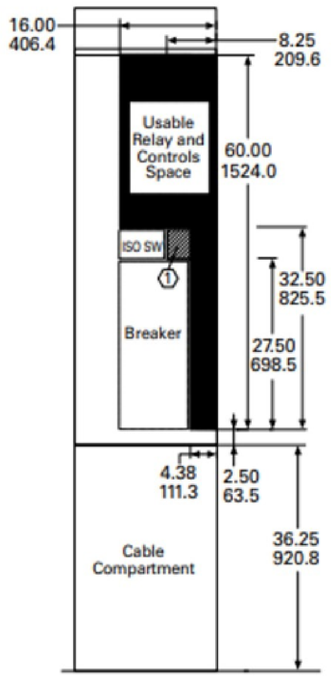

Side View of Compartment

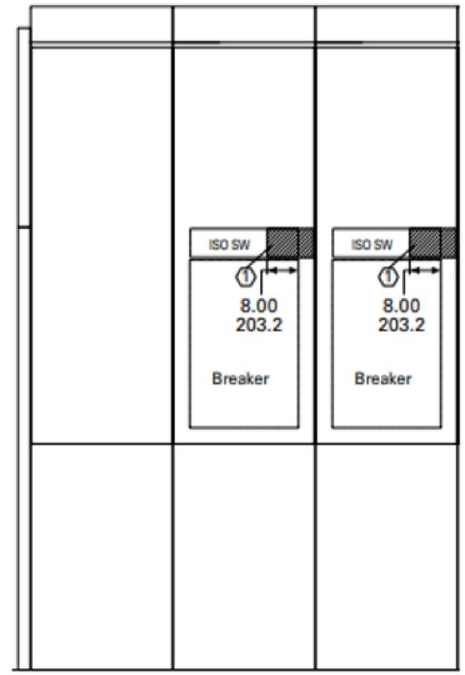

Control Structure (Side Mounted)

Switchgear Compartments

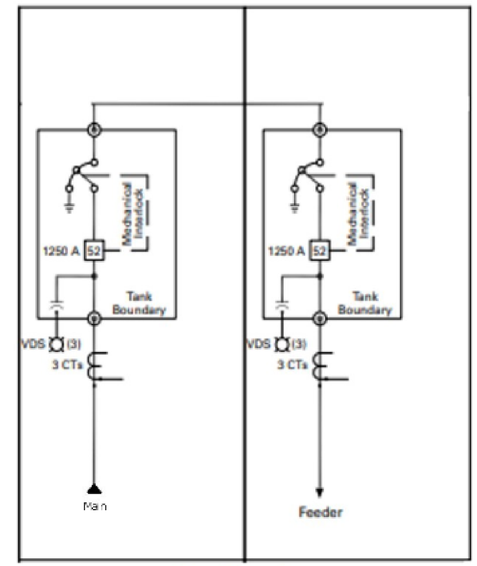

One line view

Cable Compartments

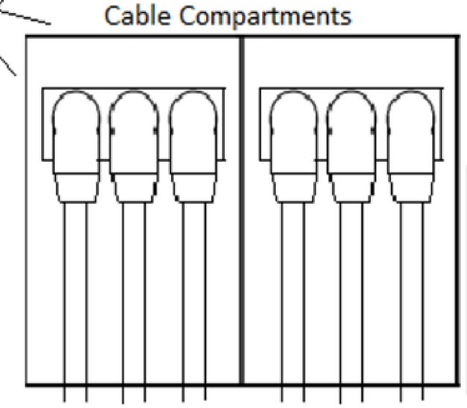

(From Collection System)

(To Main Bus)

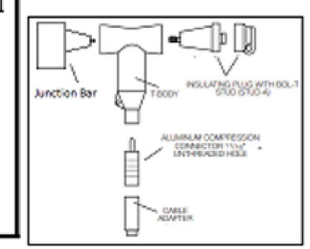

Rated Maximum Voltage kV rms	Rated Continuous Current Amperes	Lightning Impulse Withstand Voltage [LIWV] (BIL) kV Peak	Rated Short-Time Short-Circuit Current Withstand (2-Second) kA rms Sym	Power Frequency Withstand kV rms
38	1200 2000 2500	170 170 170	25, 31.5 25, 31.5 25, 31.5	80 80 80

NO	DATE	REVISIONS AND RECORD OF ISSUE	DRN	DES	CHK	PDE	APP	NO	DATE	REVISIONS AND RECORD OF ISSUE	DRN	DES	CHK	PDE	APP

3J2LM ENGINEERING

DESIGNED JM,LM,JP | DRAWN JP

CHECKED | DATE SS 2021

WIND FARM

PRELIMINARY SWITCH DETAILS

PROJECT: 100 MW WIND FARM | DRAWING NUMBER: EE-7 | REV: A

CODE | AREA

90% SUBMITTAL

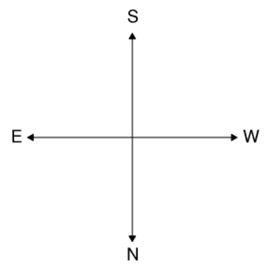

NOTES:

1. ALL DIMENSIONS SHOWN ARE PRELIMINARY AND SUBJECT TO CHANGE PENDING DETAILED DESIGN

2. IN THE EVENT OF TECHNICAL CONFLICT, ERRORS, OR DISCREPANCIES, THE DETAILED DESIGN REQUIREMENTS INCLUDING THOSE LISTED IN THE DESIGN REQUIREMENTS OR SYSTEM SPECIFICAIONS, TAKE PRECEDENCE OVER ANY INFORMATION SHOWN ON THIS DRAWING.

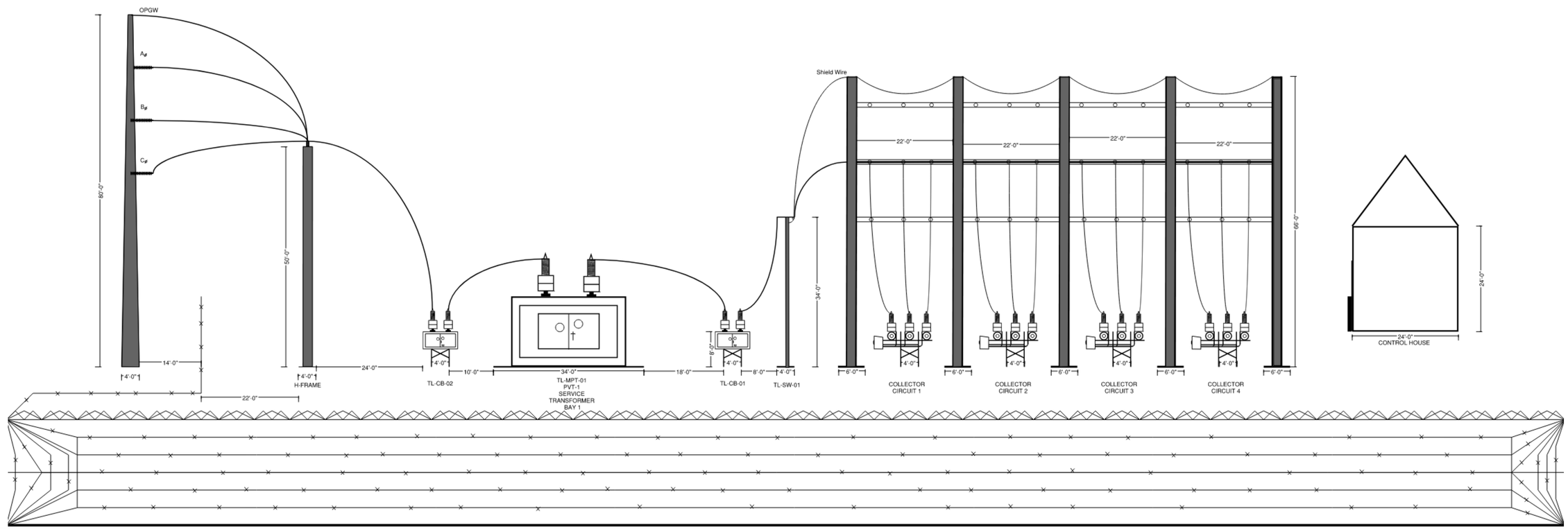

NO	DATE	REVISIONS AND RECORD OF ISSUE	DRN	DES	CHK	PDE	APP	NO	DATE	REVISIONS AND RECORD OF ISSUE	DRN	DES	CHK	PDE	APP

3J2LM ENGINEERING

DESIGNER JM,LM,JRP	DRAWN JM	WIND FARM	PROJECT 100 MW WIND FARM / DRAWING NUMBER EE-8 / REV A
CHECKED	DATE SS 2021	PRELIMINARY ELEVATION DRAWING	CODE / AREA / 90% SUBMITTAL

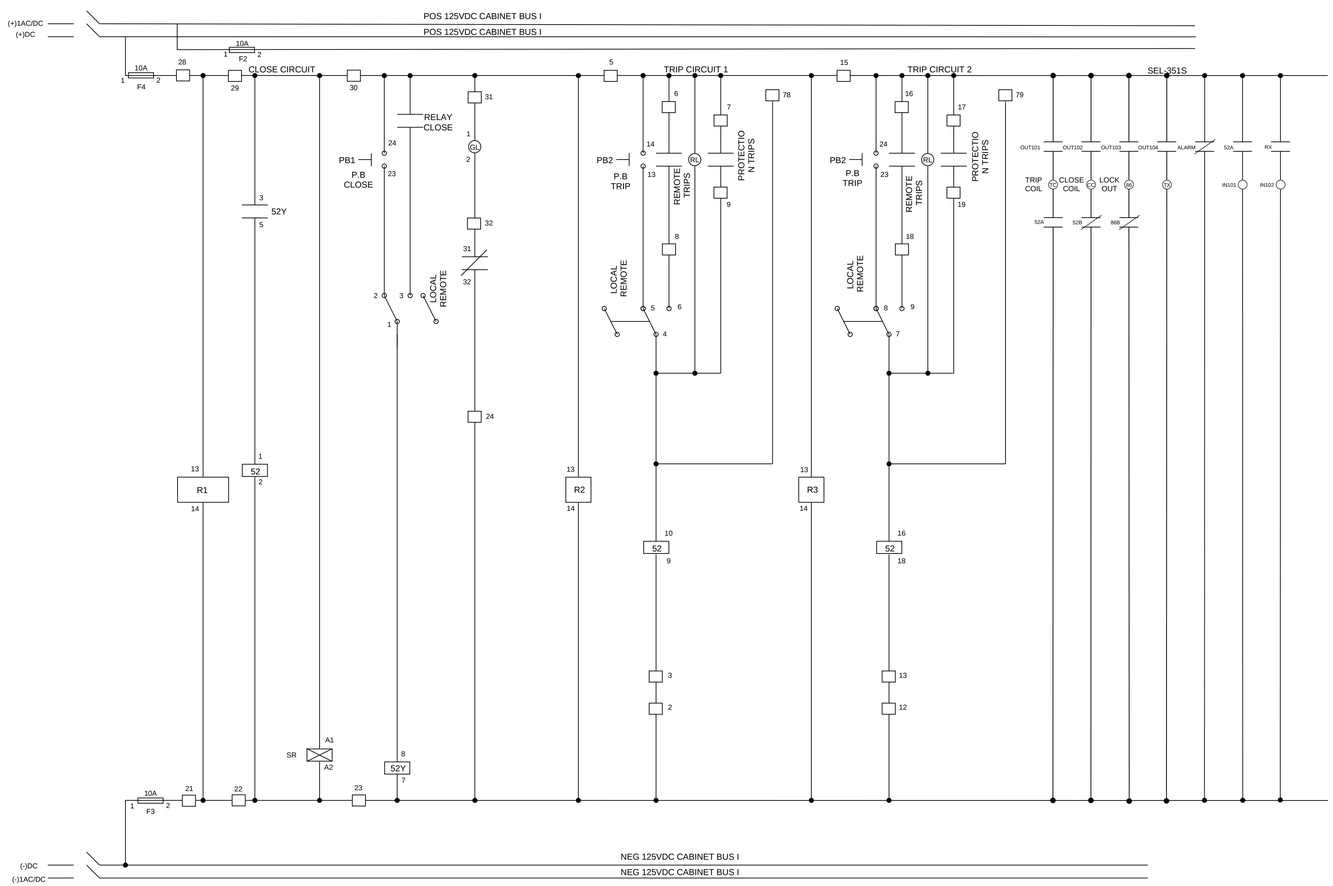

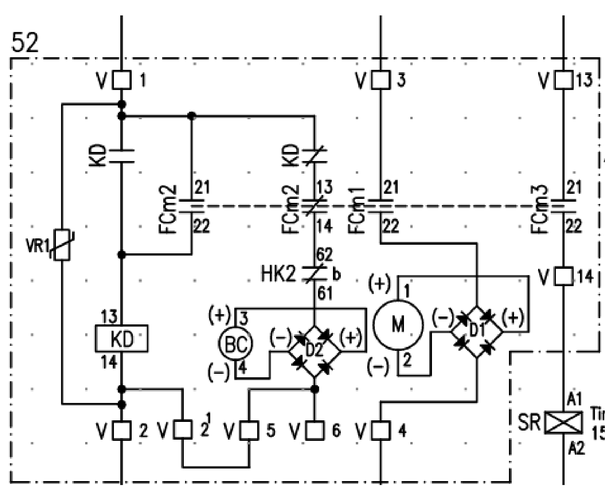

NOTES

1. ALL RATINGS SHOWN ARE PRELIMINARY AND ARE SUBJECT TO CHANGE PENDING DETAILED DESIGN.
2. EQUIPMENT SIZES ARE PRELIMINARY AND WILL BE CONFIRMED DURING DETAILED DESIGN.
3. IN THE EVENT OF TECHNICAL CONFLICTS, ERRORS, OR DISCREPANCIES, THE DETAILED DESIGN REQUIREMENTS, INCLUDING THOSE LISTED IN DESIGN REQUIREMENTS OR SYSTEM SPECIFICATIONS, TAKE PRECEDENCE OVER ANY INFORMATION SHOWN ON THIS DRAWING.

CIRCUIT BRREAKER CONTROL

(+/-) VAC/VDC	120 VAC/ 125 VDC POWER SUPPLY
(+/-) VDC	125 VDC POWER SUPPLY
☐	JUNCTION BOX

DEVICE DESCRIPTIONS

52	THREE-PHASE 34.5KV-12000a-31.5kA MAIN VACCUM INTERRUPTER COMBINED WITH HIGH SPEED MECHANICALLY INTERLOCKED GROUNDING SWITCH MAKE AND 34.5kA WITH COMMUTATION AND OPERATINGMECHANISM
52Y	AUX RELAY 125 VDC FOR LOCAL/REMOTE CLOSE
R1	AUX RELAY 125 VDC FOR CLOSE CIRCUIT LOSS-OF-VOLTAGE ALARM
R2	AUX RELAY 125 VDC FOR TRIP CIRCUIT I LOSS OF VOLTAGE
R3	AUX RELAY 125 VDC FOR CLOSE CIRCUIT II
GL	GREEN LAMP FOR C.B OPENED
RL	RED LAP FOR C.B CLOSED

NO	DATE	REVISIONS AND RECORD OF ISSUE	DRN	DES	CHK	PDE	APP

NO	DATE	REVISIONS AND RECORD OF ISSUE	DRN	DES	CHK	PDE	APP

3J2LM ENGINEERING

DESIGNER JM,LM,JRP | DRAWN JM | CHECKED | DATE SS 2021

WIND FARM

PRELIMINARY 34.5KV FEEDER BREAKER DC SCHEMATIC

PROJECT: 100 MW WIND FARM | DRAWING NUMBER: EE-9 | REV: A

CODE | AREA

90% SUBMITTAL

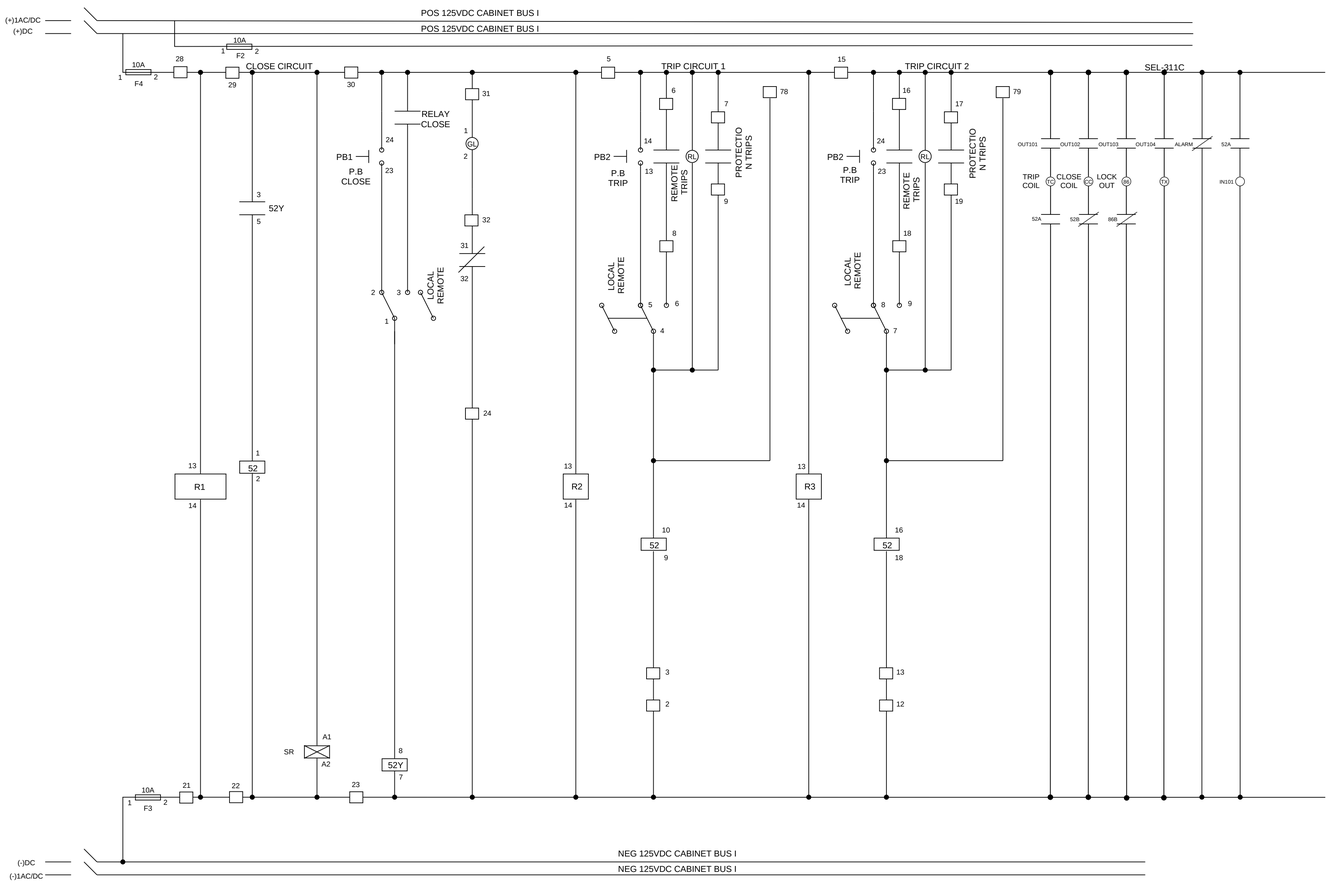

NOTES

1. ALL RATINGS SHOWN ARE PRELIMINARY AND ARE SUBJECT TO CHANGE PENDING DETAILED DESIGN.
2. EQUIPMENT SIZES ARE PRELIMINARY AND WILL BE CONFIRMED DURING DETAILED DESIGN.
3. IN THE EVENT OF TECHNICAL CONFLICTS, ERRORS, OR DISCREPANCIES, THE DETAILED DESIGN REQUIREMENTS, INCLUDING THOSE LISTED IN DESIGN REQUIREMENTS OR SYSTEM SPECIFICATIONS, TAKE PRECEDENCE OVER ANY INFORMATION SHOWN ON THIS DRAWING.

CIRCUIT BRREAKER CONTROL

(+/-) VAC/VDC	120 VAC/ 125 VDC POWER SUPPLY
(+/-) VDC	125 VDC POWER SUPPLY
☐	TERMINATION POINT

DEVICE DESCRIPTIONS

52	THREE-PHASE 138KV-40kA MAIN VACCUM INTERRUPTER COMBINED WITH HIGH SPEED MECHANICALLY INTERLOCKED GROUNDING SWITCH MAKE AND 31.5kA WITH COMMUTATION AND OPERATINGMECHANISM
52Y	AUX RELAY 125 VDC FOR LOCAL/REMOTE CLOSE
R1	AUX RELAY 125 VDC FOR CLOSE CIRCUIT LOSS-OF-VOLTAGE ALARM
R2	AUX RELAY 125 VDC FOR TRIP CIRCUIT I LOSS OF VOLTAGE
R3	AUX RELAY 125 VDC FOR CLOSE CIRCUIT II
GL	GREEN LAMP FOR C.B OPENED
RL	RED LAP FOR C.B CLOSED

NO	DATE	REVISIONS AND RECORD OF ISSUE	DRN	DES	CHK	PDE	APP

NO	DATE	REVISIONS AND RECORD OF ISSUE	DRN	DES	CHK	PDE	APP

3J2LM ENGINEERING

DESIGNER JM,LM,JRP | DRAWN JM
CHECKED | DATE SS 2021

WIND FARM

CB-02 HIGH SIDE BREAKER
DC SCHEMATIC

PROJECT: 100 MW WIND FARM
DRAWING NUMBER: EE-10
REV: A
CODE
AREA
90% SUBMITTAL

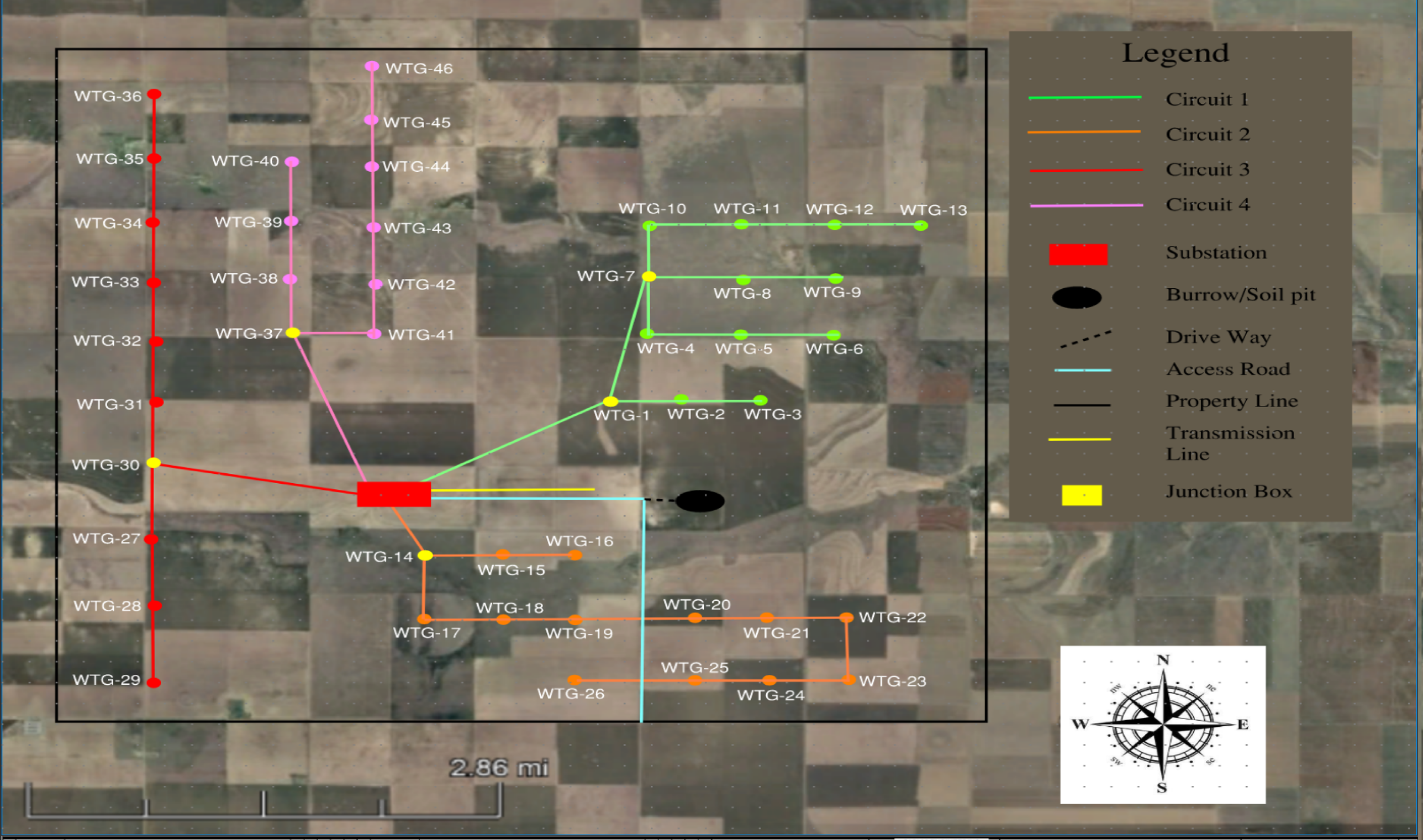

NO	DATE	REVISIONS AND RECORD OF ISSUE	DRN	DES	CHK	PDE	APP	NO	DATE	REVISIONS AND RECORD OF ISSUE	DRN	DES	CHK	PDE	APP

3J/2LM ENGINEERING

DESIGNER JH,LM,MW	DRAWN JH,LM,MW	WIND FARM	PROJECT 100 MW WIND FARM / DRAWING NUMBER CIM-1 / REV A
CHECKED	DATE SS 2021	Collection System Layout	CODE / AREA / 90% Submittal

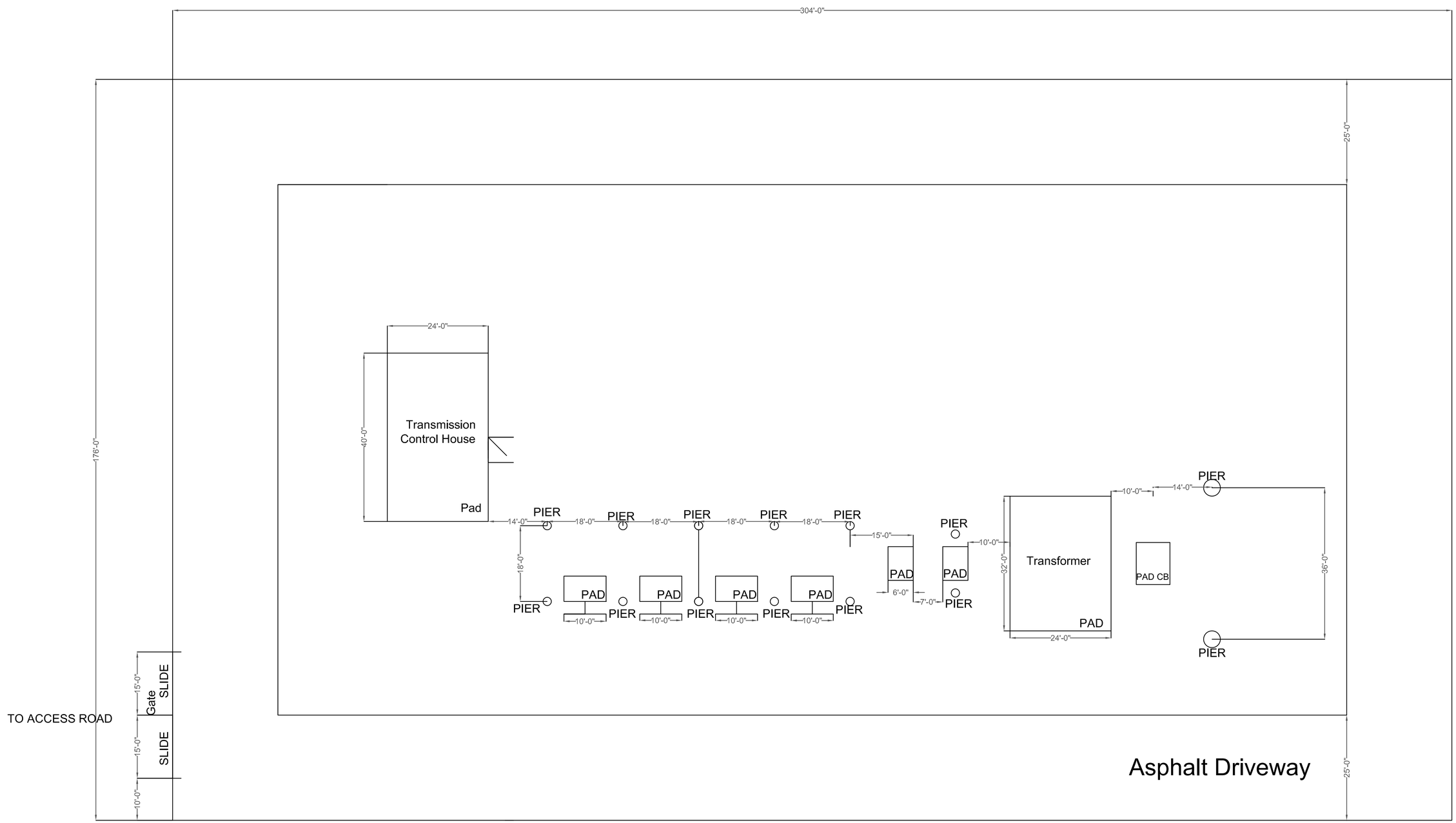

NO	DATE	REVISIONS AND RECORD OF ISSUE	DRN	DES	CHK	PDE	APP	NO	DATE	REVISIONS AND RECORD OF ISSUE	DRN	DES	CHK	PDE	APP

3J2LM ENGINEERING

DESIGNER JH,LM,MW | DRAWN JH,LM,MW | CHECKED | DATE SS 2021

WIND FARM

Foundation Plan

PROJECT: 100 MW WIND FARM | DRAWING NUMBER: CIM-2 | REV: A

CODE | AREA

90% Submittal

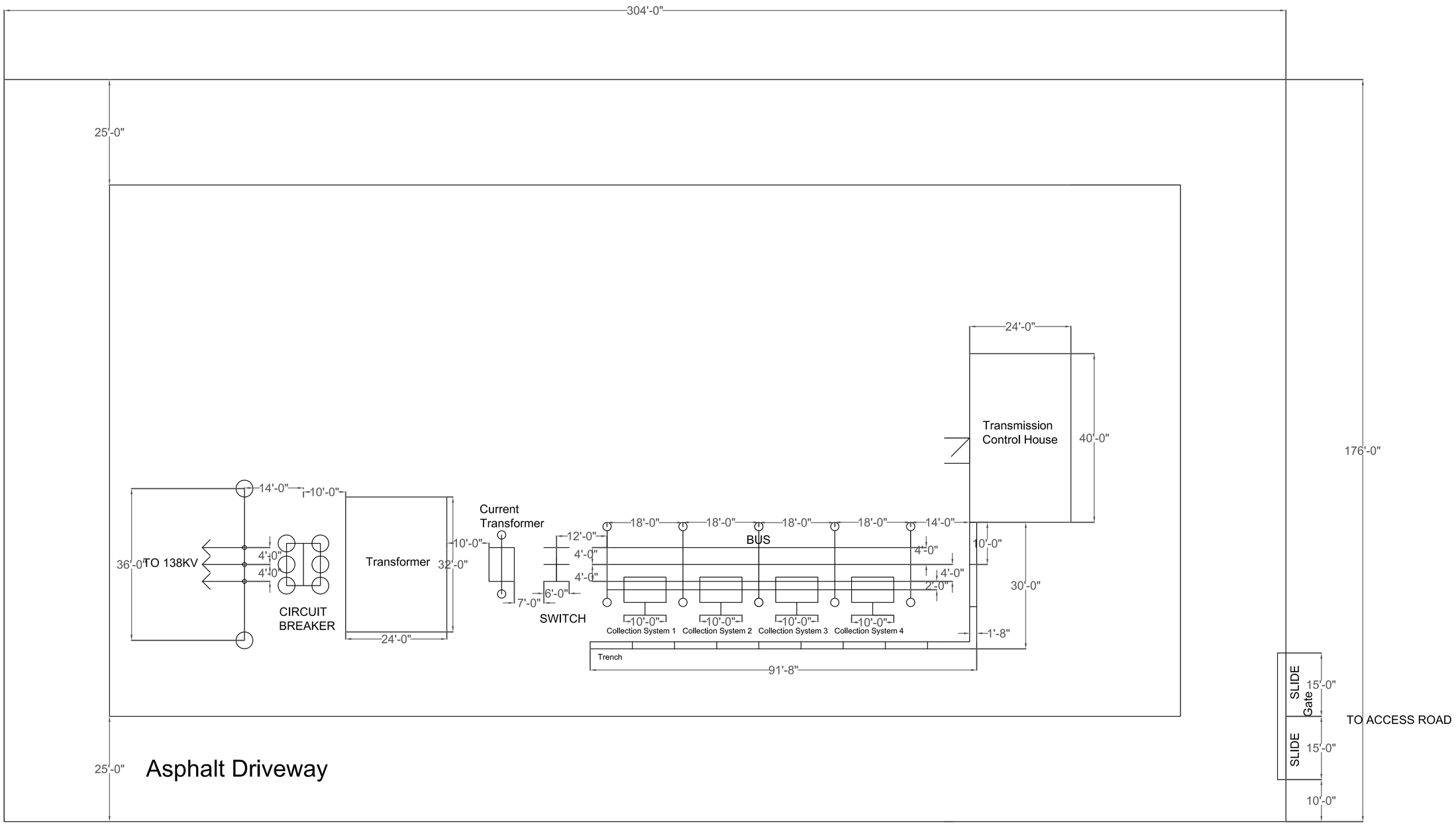

NO	DATE	REVISIONS AND RECORD OF ISSUE	DRN	DES	CHK	PDE	APP	NO	DATE	REVISIONS AND RECORD OF ISSUE	DRN	DES	CHK	PDE	APP

3J2LM ENGINEERING

DESIGNER JH,LM,MW	DRAWN JH,LM,MW	WIND FARM	PROJECT 100 MW WIND FARM / DRAWING NUMBER CIM-3 / REV A
CHECKED	DATE SS 2021	Plan View Layout	CODE / AREA / 90% Submittal

Cut and Fill Summary			
Feature	Cut Volume (CU M)	Fill Volume (CU M)	Net Volume (CU M)
Substation + Access Road	243952	9232	CUT 234720

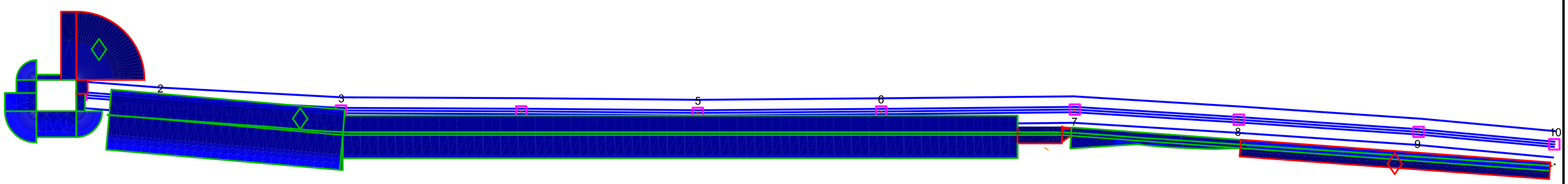

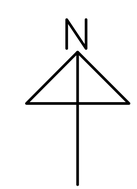

NO	DATE	REVISIONS AND RECORD OF ISSUE	DRN	DES	CHK	PDE	APP	NO	DATE	REVISIONS AND RECORD OF ISSUE	DRN	DES	CHK	PDE	APP

3J2LM ENGINEERING

DESIGNER JH,LM,MW | DRAWN JH,LM,MW | CHECKED | DATE SS 2021

WIND FARM

Site Development Sketch

PROJECT 100 MW WIND FARM | DRAWING NUMBER CIM-4 | REV A

CODE | AREA

90% Submittal

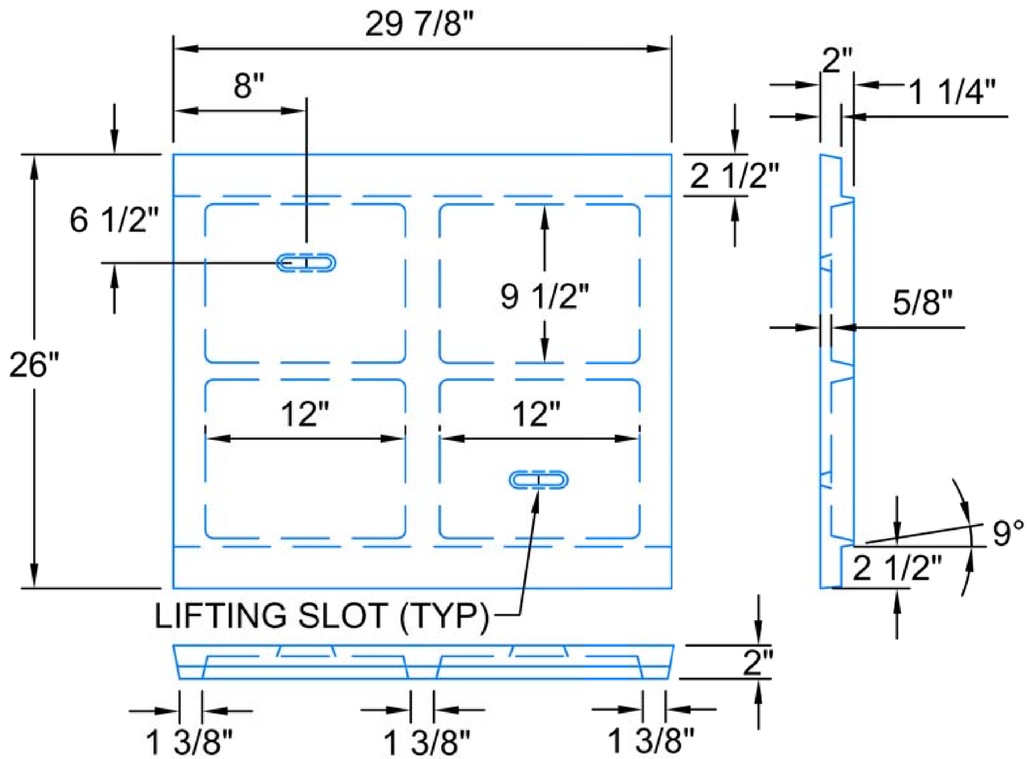

LP20-30

SCALE: 1" = 1'-0"

WEIGHT: 68 #

PEDESTRIAN RATED

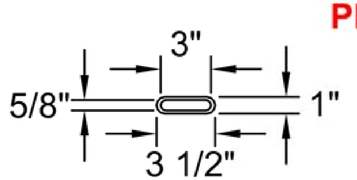

LIFTING SLOT DETAIL

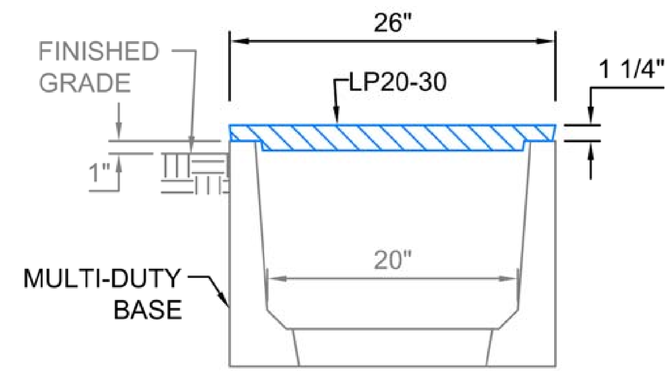

PEDESTRIAN CONCRETE LID ON MULTI-DUTY BASE

Trenwa Inc.

1419 ALEXANDRIA PIKE FORT THOMAS, KY 41075 859-781-0831

PEDESTRIAN CONCRETE LID & SECTION FOR 20" WIDE MULTI-DUTY TRENCH

Date:	Dwg. No.
9/20/17	CIM-5

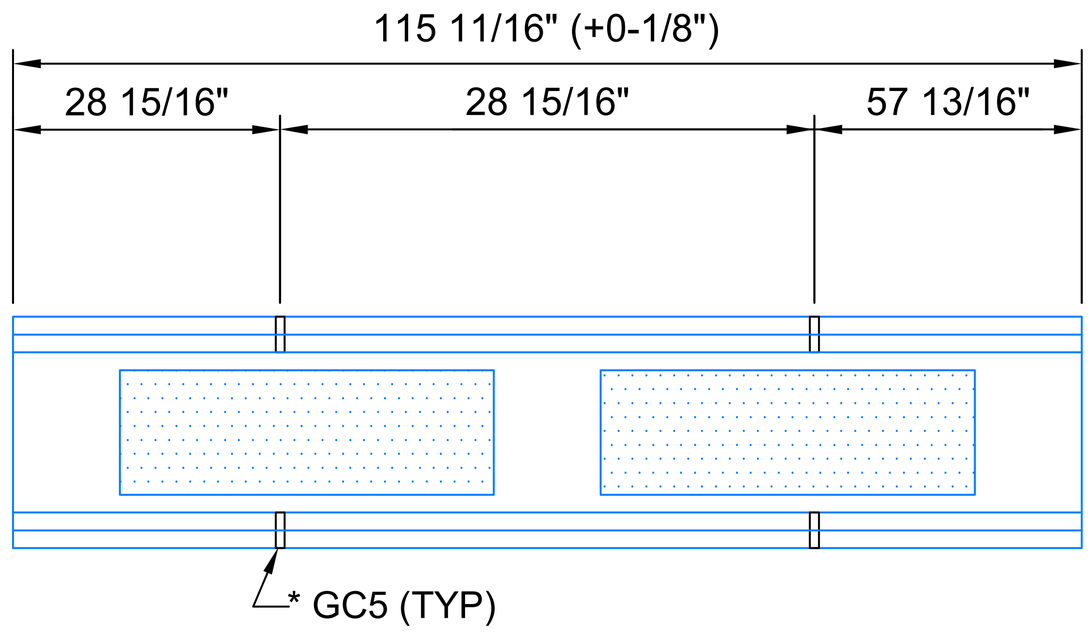

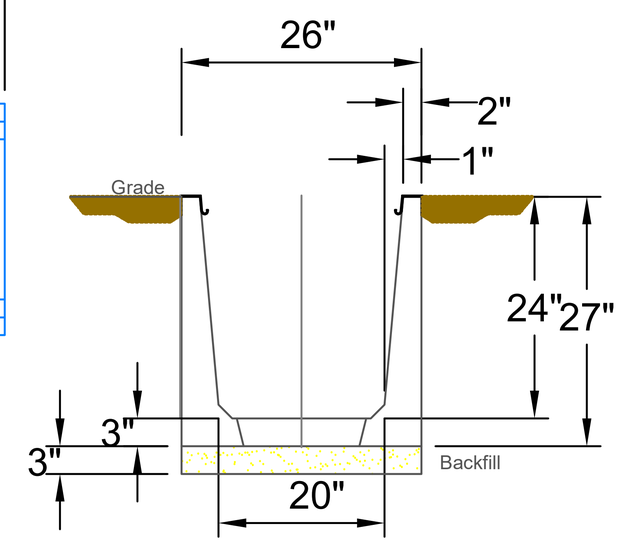

BM2024-120

SCALE: 1/2" = 1'-0"
WEIGHT: 1774 #
TIER 15 RATED

NO	DATE	REVISIONS AND RECORD OF ISSUE	DRN	DES	CHK	PDE	APP
NO	DATE	REVISIONS AND RECORD OF ISSUE	DRN	DES	CHK	PDE	APP

3J2LM ENGINEERING
DESIGNER LM,JH,MW DRAWN LM,JH,MW
CHECKED DATE SS 2021

WIND FARM
TRENCH SKETCH

PROJECT 100 MW WIND FARM
DRAWING NUMBER CIM-6
REV A
CODE
AREA
90% SUBMITTAL

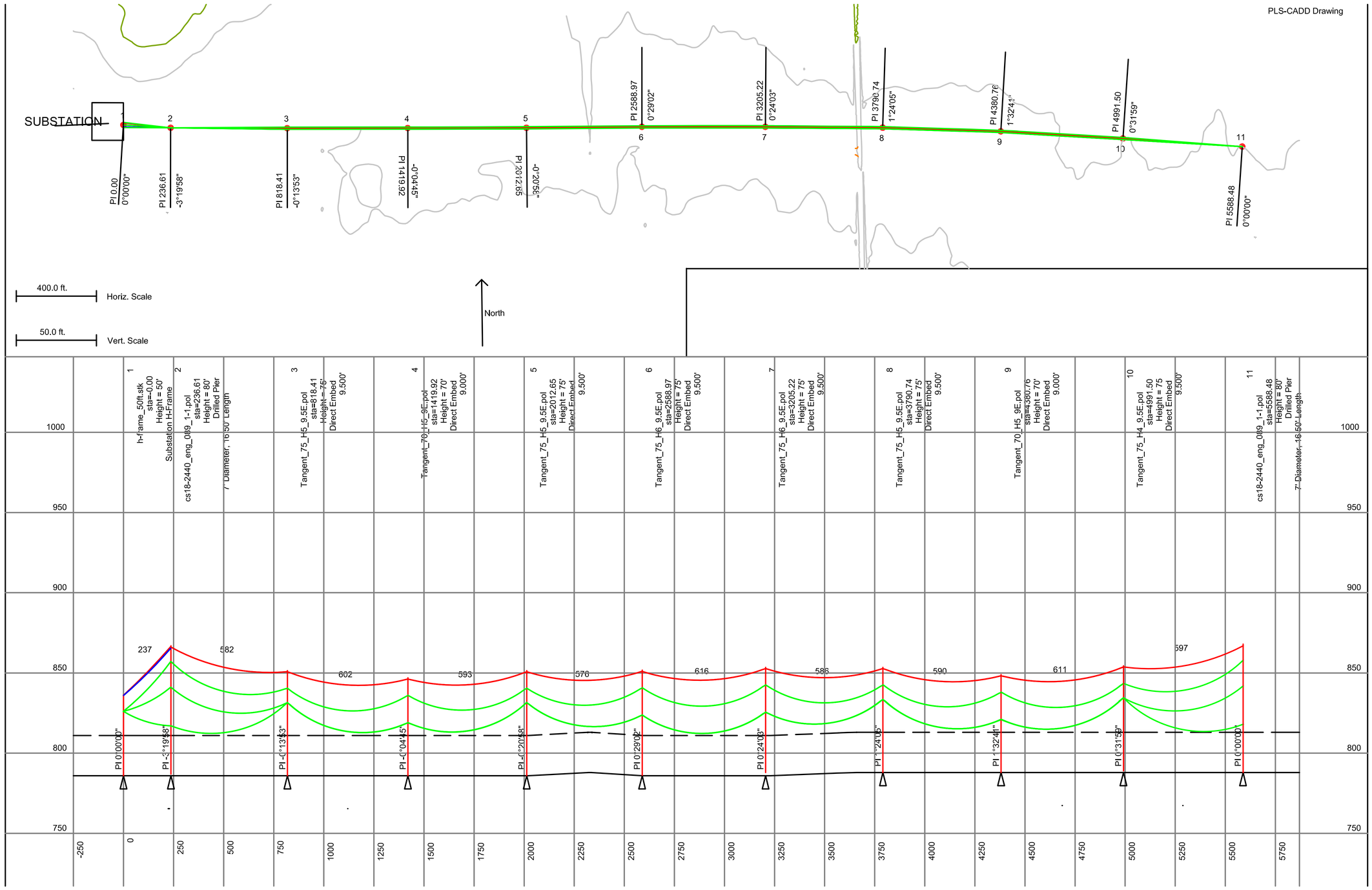

LEGEND:

- Clearance Line:
- Ground Line:
- Conductor:
- OPGW:
- Shield Wire:

NO	DATE	REVISIONS AND RECORD OF ISSUE	DRN	DES	CHK	PDE	APP

NO	DATE	REVISIONS AND RECORD OF ISSUE	DRN	DES	CHK	PDE	APP

3J2LM ENGINEERING

DESIGNER LM,JH,MW | DRAWN LM,JH,MW | CHECKED | DATE SS 2021

WIND FARM

PLAN AND PROFILE

PROJECT: 100 MW WIND FARM | DRAWING NUMBER: CIM-7 | REV: A

CODE | AREA

90% SUBMITTAL

STRUCTURES 2/11 DATA TABLES
DEADEND STRUCTURES

DESIGN DATA:
795 KCMIL DRAKE ASCR/AW (SINGLE CONDUCTOR)
7/16 EHS STEEL SHIELD WIRE
BRUGG 49AY85ACS–2C OPGW
SOLID ICE DENSITY OF 57 LBS/FT3

SPAN DATA:

DESIGN SPAN	CONDUCTOR	SHIELD
WIND SPAN	500	500
WEIGHT SPAN	700	700
RULING SPAN	700	700

STRUCTURE OUTLINE DRAWING:
MINES 138KV TRANSMISSION LINE DEADEND OUTLINE AND DESIGN

LOAD TABLE DATA

	LOAD	CASE 1A	CASE 1B	CASE 2A	CASE 2B	CASE 3A	CASE 3B	CASE 4	CASE 5
SHIELD WIRE	T1	--	7200	--	3100	--	3700	2450	2050
	V1	--	500	--	160	--	330	300	133
	L1	--	500	--	250	--	140	100	55
OPGW	T2	--	7200	--	3100	--	3700	2450	2050
	V2	--	500	--	160	--	330	300	133
	L2	--	500	--	250	--	140	100	55
138KV CONDUCTOR	T3	16000	14250	8500	7100	1600	875	5350	4325
	V3	1700	1700	550	550	8100	8100	975	475
	L3	750	1400	350	775	225	350	275	175
WIND LOAD ON STRUCTURE		10	10	25.6000	25.6000	2.3000	2.3000	4.4000	2.0000

STRUCTURES 3–10 DATA TABLES
BRACED POST TANGENT STRUCTURES

DESIGN DATA:
795 KCMIL DRAKE ASCR/AW (SINGLE CONDUCTOR)
BRUGG 49AY85ACS–2C OPGW
SOLID ICE DENSITY OF 57 LBS/FT3

SPAN DATA:

DESIGN SPAN	CONDUCTOR	SHIELD
WIND SPAN	500	500
WEIGHT SPAN	700	700
RULING SPAN	700	700

STRUCTURE OUTLINE DRAWING:
MINES 138KV TRANSMISSION LINE TANGENT OUTLINE AND DESIGN

LOAD TABLE DATA

	LOAD	CASE 1A	CASE 1B	CASE 2A	CASE 2B	CASE 3A	CASE 3B	CASE 4	CASE 5
OPGW	T1	800	450	1325	250	225	150	75	50
	V1	375	375	100	100	250	250	175	100
	L1	15000	7175	8500	3075	5875	3700	2450	2050
138KV CONDUCTOR	T2	4325	750	4675	700	3850	250	200	125
	V2	1000	1000	375	375	675	675	700	375
	L2	15100	14300	13500	7150	9175	8125	5350	4325
WIND LOAD ON STRUCTURE		10	10	25.6000	25.6000	2.3000	2.3000	4.4000	2.0000

NOTES

1. LOADS ARE ULTIMATE VALUES AND INCLUDE OVERLOAD FACTORS.
2. WIRE LOADS ARE IN POUNDS, UNLESS NOTED OTHERWISE, AND ARE TOTAL FOR AHEAD AND BACK SPANS.
3. STRUCTURE AND ATTACHMENTS SHALL BE DESIGNED FOR THE SIMULTANEOUS APPLICATION OF DEAD LOAD, WIND ON THE STRUCTURE, AND WIRE LOADS FOR EACH LOADING CASE.
4. WIND PRESSURES SHOWN ON LOAD TABLE DATA ARE BASED ON A SHAPE FACTOR OF 1.1 FOR 12–SIDED SECTIONS. WIND PRESSURES ALSO INCLUDE THE OVERLOAD FACTORS FOR EACH WEATHER CASE. SEE BELOW FOR DESIGN DATA.
5. APPLY WIND ON STRUCTURE IN + T DIRECTION.
6. PRECAMBER LOADS WILL BE PROVIDED WITH THE FINAL LINE ANGLES.
7. LOADS FOR DEADEND LOAD CASES WERE DEVELOPED USING THE WORST CASE TRANSVERSE AND WORST CASE LONGITUDINAL LOADS THROUGHOUT THE DESIGN LINE ANGLE RANGE.
8. APPLY 500LB VERTICAL LOAD AND 200LB HORIZONTAL LOAD AT EACH ATTACHMENT POINT FOR MAINTENANCE LOAD.
9. POLE DEFLECTION SHALL BE LIMITED TO 2% OF THE STRUCTURE HEIGHT FOR LOAD CASE 5.

LOAD CASE DATA

LOAD CASE DESCRIPTION	TEMP	WIND	ICE	OVERLOAD FACTOR			DESIGN HORIZONTAL TENSIONS (LBS) FULL–TENSION SPAN		DESIGN HORIZONTAL TENSIONS (LBS) SUBSTATION SLACK SPA	
	(°F)	(psf)	(inches)	VERTICAL	WIND	TENSION	138KV CONDUCTOR*	SW/OPGW	138KV CONDUCTOR*	SW/OPG
CASE 1A) NESC HEAVY INTACT (250B)	30	9	0.5	1.50	2.50	1.65	9400	9400	4000	2000
CASE 1B) NESC HEAVY DEADEND (250B)	30	9	0.5	1.50	2.50	1.65	9400	9400	4000	2000
CASE 2A) HIGH WIND INTACT (250C)	60	45.20 – wires, 53.60 – structures	0	1.10	1.10	1.10	6800	4800	4600	2200
CASE 2B) HIGH WIND DEADEND (250C)	60	45.20 – wires, 53.60 – structures	0	1.10	1.10	1.10	6800	4800	4600	2200
CASE 3A) WIND/CONCURRENT ICE INTACT (250D)	15	2.3 – wires, 2.8 structures	0.5	1.0 – wires, 1.25 – structure	1.00	1.00	12600	9300	5600	2900
CASE 3B) WIND/CONCURRENT ICE DEADEND (250D)	15	2.3 – wires, 2.8 structures	0.5	1.0 – wires, 1.25 – structure	1.00	1.00	12600	9300	5600	2900
CASE 4) CONSTRUCTION: SNUB	20	4	0	1.5 – wires, 1.1 – structure	1.5	1.5	n/a	n/a	3700	1900
CASE 5) MAINTENANCE	60	4	0	2.0 – wires 1.1 – structure	1.00	1.00	6700	5100	7000	2000

* CONDUCTOR TENSIONS ARE PER PHASE

NO	DATE	REVISIONS AND RECORD OF ISSUE	DRN	DES	CHK	PDE	APP	NO	DATE	REVISIONS AND RECORD OF ISSUE	DRN	DES	CHK	PDE	APP

3J2LM ENGINEERING

DESIGNER LM,JH,MW | DRAWN LM,JH,MW | CHECKED | DATE SS 2021

WIND FARM

STRUCTURE LOADING DRAWING

PROJECT: 100 MW WIND FARM | DRAWING NUMBER: CIM-8 | REV: A

CODE | AREA

90% SUBMITTAL

MAR90343 AUTOCAD 2012

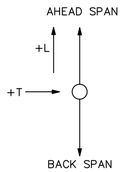

STRUCTURE PLAN
MINIMUM ANGLE

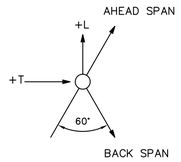

STRUCTURE PLAN
MAXIMUM ANGLE

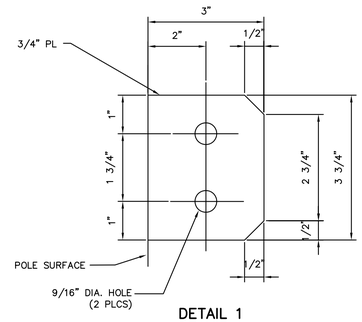

DETAIL 1
GROUND TAB

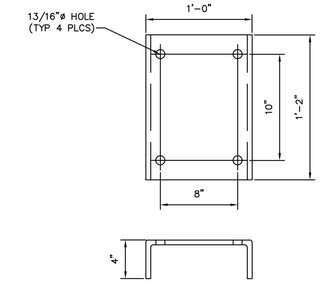

DETAIL 2
JUMPER POST INSULATOR BRACKET

VERIFY DIMENSIONS W/ JUMPER POST PRIOR TO FABRICATION

NOTES:

1. SEE BILL OF MATERIAL LIST FOR STRUCTURE HEIGHTS AND ACTUAL LINE ANGLES.
2. PROVIDE OPGW DOWNLEAD VANGS ONLY WHEN SPECIFIED ON THE BILL OF MATERIAL LIST.
3. MATERIAL: SEE SPECIFICATIONS
4. SEE LINE SPECIFIC DRAWING FOR DESIGN DATA, SPAN DATA, LOAD CASE DATA, AND LOAD TABLE DATA.
5. PROPOSED POLE BASE DIAMETERS WILL BE EVALUATED AGAINST THE ANTICIPATED FOUNDATION COST.
6. INSULATOR AND WIRE ATTACHMENTS SHALL BE SIZED FOR THE DESIGN LOADS, BUT SHALL BE A MINIMUM OF 3/4" IN THICKNESS.

REFERENCE DRAWINGS:

400Y-2020 WARNING AND MILEAGE SIGNS
400Y-2021 SIGN MOUNTING DETAILS
400Y-2022 MAINTENANCE PROVISIONS – OUTLINES

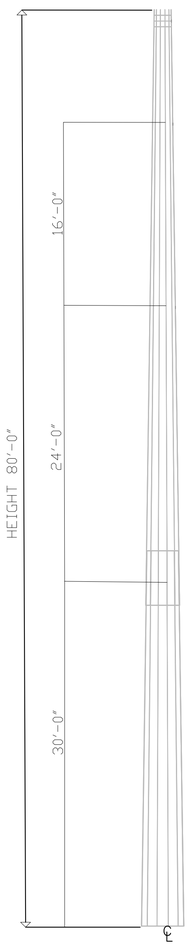

ELEVATION

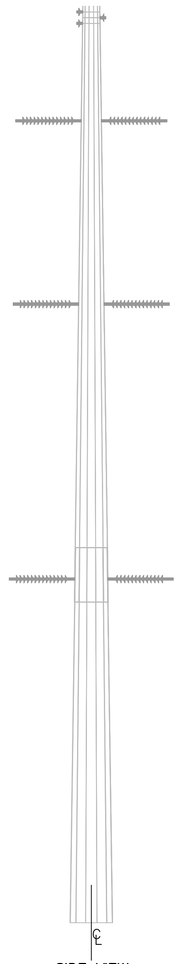

SIDE VIEW

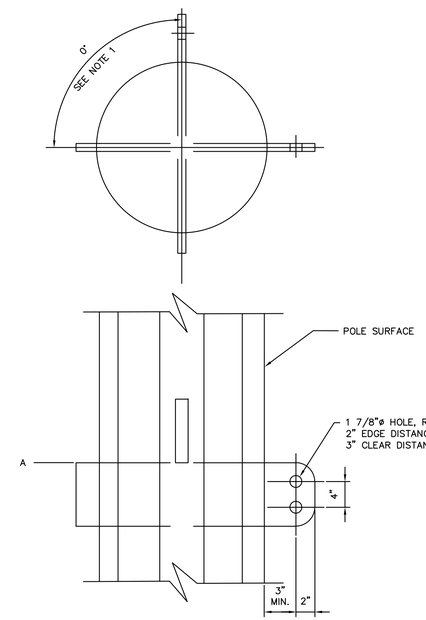

DETAIL 3
CONDUCTOR ATTACHMENT VANG

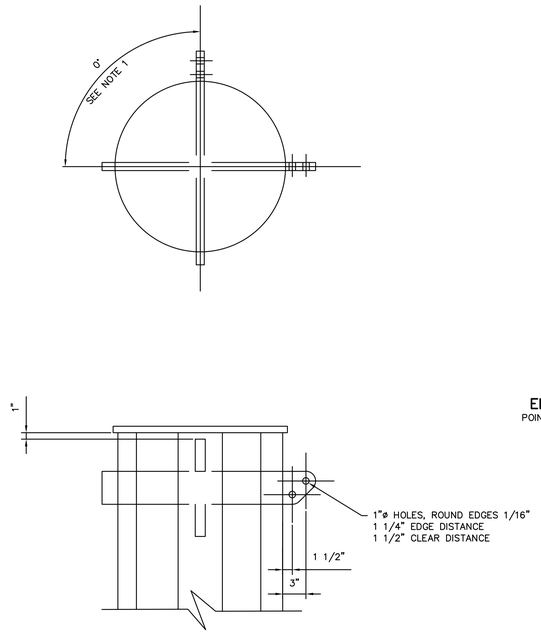

DETAIL 4
SHIELD WIRE ATTACHMENT VANG

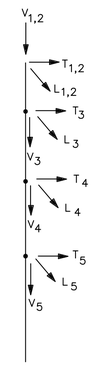

ELEVATION VIEW
POINT LOAD NOMENCLATURE

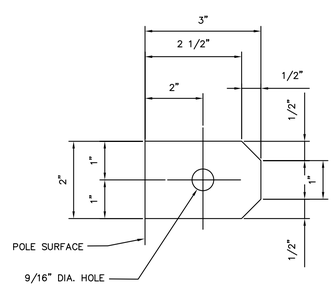

DETAIL 5
OPGW DOWNLEAD VANG
SEE NOTE 2

NO	DATE	REVISIONS AND RECORD OF ISSUE	DRN	DES	CHK	PDE	APP

NO	DATE	REVISIONS AND RECORD OF ISSUE	DRN	DES	CHK	PDE	APP

3J2LM ENGINEERING

DESIGNER LM,JH,MW | DRAWN LM,JH,MW
CHECKED | DATE SS 2021

WIND FARM

DEADEND POLE DRAWING

PROJECT: 100 MW WIND FARM
DRAWING NUMBER: CIM-9
REV: A
CODE
AREA
90% SUBMITTAL

NOTES:

1. SEE BILL OF MATERIAL LIST FOR STRUCTURE HEIGHTS AND EMBEDMENTS.
2. PROVIDE OPGW DOWNLEAD VANGS ONLY WHEN SPECIFIED ON THE BILL OF MATERIAL LIST.
3. MATERIAL: SEE SPECIFICATIONS
4. SEE LINE SPECIFIC DRAWING FOR DESIGN DATA, SPAN DATA, LOAD CASE DATA, AND LOAD TABLE DATA.
5. INSULATOR AND WIRE ATTACHMENTS SHALL BE SIZED FOR THE DESIGN LOADS, BUT SHALL BE A MINIMUM OF 3/4" IN THICKNESS.

REFERENCE DRAWINGS:

400Y-2020 WARNING AND MILEAGE SIGNS
400Y-2021 SIGN MOUNTING DETAILS
400Y-2022 MAINTENANCE PROVISIONS – OUTLINES

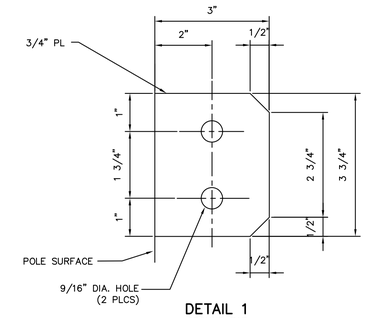

DETAIL 1
GROUND TAB

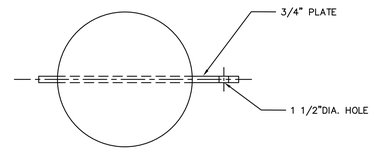

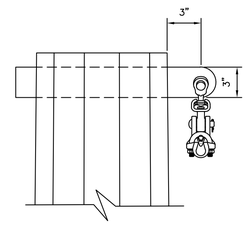

DETAIL 2
OPGW ATTACHMENT VANG

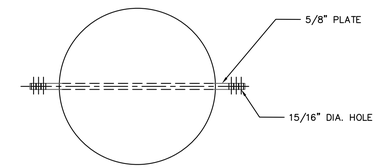

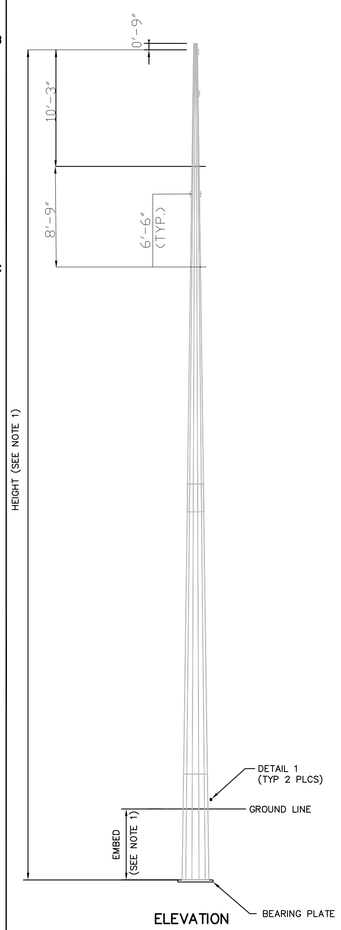

ELEVATION

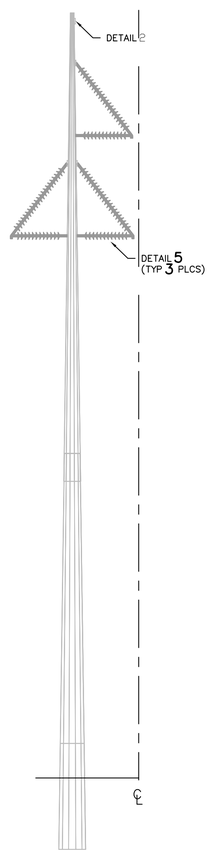

SIDE VIEW

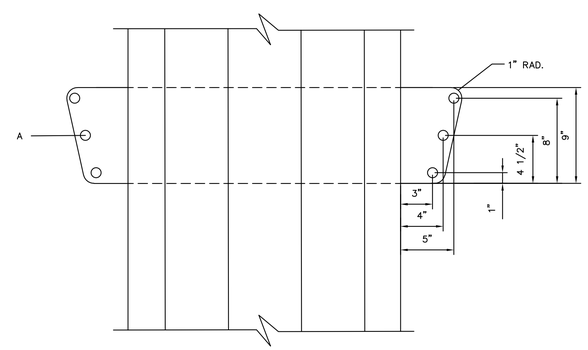

DETAIL 3
CONDUCTOR ATTACHMENT

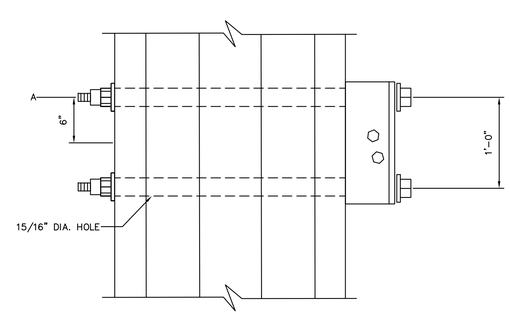

DETAIL 4
CONDUCTOR ATTACHMENT

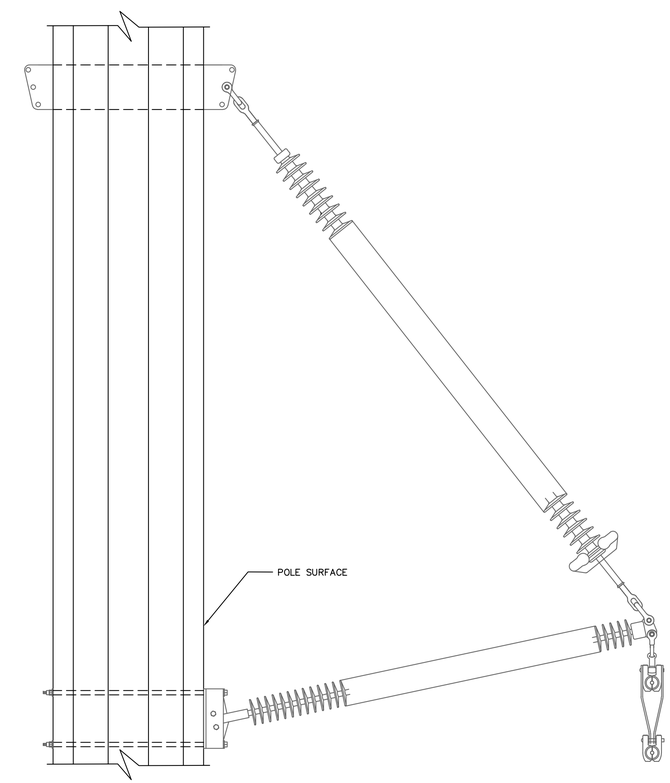

DETAIL 5
CONDUCTOR ATTACHMENT

NO	DATE	REVISIONS AND RECORD OF ISSUE	DRN	DES	CHK	PDE	APP

NO	DATE	REVISIONS AND RECORD OF ISSUE	DRN	DES	CHK	PDE	APP

3J2LM ENGINEERING

DESIGNER LM,JH,MW	DRAWN LM,JH,MW	WIND FARM	PROJECT 100 MW WIND FARM / DRAWING NUMBER CIM-10 / REV A
CHECKED	DATE SS 2021	TANGENT POLE DRAWING	CODE / AREA / 90% SUBMITTAL