MINES Responsible Gas Initiative

The Payne Institute for Public Policy

COLORADO SCHOOL OF MINES
EARTH • ENERGY • ENVIRONMENT

Colorado School of Mines

Payne Institute of Energy Policy

Glossary of Terminology related to Responsible Gas

(Version 2- revised 1.31.2022)

Every industry has its own vocabulary. This helps a great deal in discussing operational detail within your group as everyone shares the same context so you can use abbreviations and local terms to make your communications more efficient. But when it comes to communications between different groups these local tribal languages present a barrier to efficient communications. This glossary outlines a number of key terms for the field of Responsible Gas, crossing the discipline gap between oil and gas production operations and data analytics as to create the common understanding needed for correct interpretation of terms. This glossary uses a large number of references which are cited for each definition.

Table of contents:

1. Overview, basic definitions and units

Greenhouse gases: Those gases, such as water vapor, carbon dioxide, nitrous oxide, methane, hydrofluorocarbons (HFCs), perfluorocarbons (PFCs) and sulfur hexafluoride, that are transparent to solar (short-wave) radiation but opaque to long-wave (infrared) radiation, thus preventing long-wave radiant energy

from leaving Earth's atmosphere. The net effect is a trapping of absorbed radiation and a tendency to warm the planet's surface. https://www.eia.gov/tools/glossary/index.php?id=G#greenh_gases

In an oil field, oil is almost always associated with a certain quantity of natural gas: newer oil wells are equipped for the recovery of both natural gas, natural gas liquids and crude oil and hence the gas is an additional resource of the oilfield. In some basins, natural gas is the primary hydrocarbon resource. However, the recovery of natural gas presumes that there are the transportation infrastructures and markets available. When the quantity of gas recovered from the oilfield as a "secondary" product is limited, economic solutions maybe not exist. Hence the problem arises of what to do with the associated gas.

Gas to Oil ratio (GOR) - When oil is produced to surface temperature and pressure it is usual for some natural gas to come out of solution. The gas/oil ratio (GOR) is the ratio of the volume of gas ("scf") that comes out of solution to the volume of oil — at standard conditions. The GOR is a dimensionless ratio (volume per volume) in metric units, but in field units, it is usually measured in cubic feet of gas per barrel of oil or condensate.

Bubble Point Pressure – Hydrocarbon bubble point is the pressure at which a pressurized hydrocarbon liquid will become oversaturated with respect to the amount of entrained gas dissolved in it. The bubble point pressure, also known as the saturation pressure, is the pressure, at some reference temperature, that the first bubble of gas is liberated from the liquid phase. The reference temperature is usually the reservoir temperature, but any temperature can be used. The bubble point pressure is determined by an experiment called "Constant Composition Expansion" (CCE), also called: "flash liberation". The device used to perform this experiment is the PV cell,

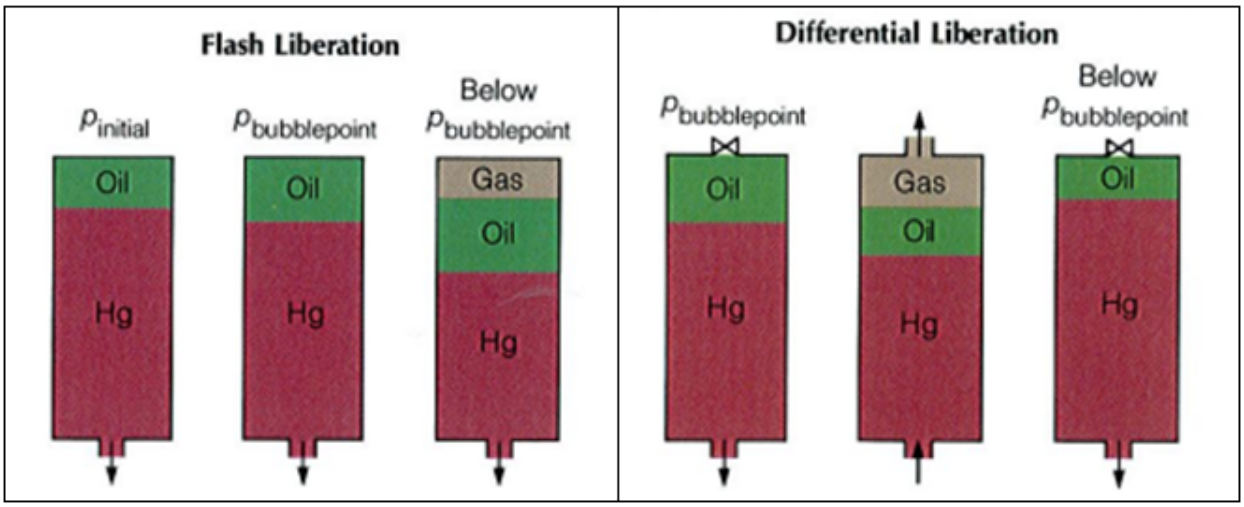

https://production-technology.org/tag/bubble-point-pressure/

Reid Vapor Pressure (RVP) - Reid vapor pressures (RVPs) are sometimes specified by crude oil purchasers, particularly if the crude is to be transported by tanker or truck prior to reaching a processing plant. Purchasers specify low RVPs so that they will not be paying for light components in the liquid, which will be lost due to weathering. RVP is used to characterize the volatility of gasolines and crude oils. The RVP of a mixture is determined experimentally according to a procedure standardized by the American Society for Testing Materials at 100 °F (37.8 °C). A sample is placed in a container such that the ratio of the vapor volume to the liquid volume is 4 to 1. The absolute pressure at 100 °F (37.8 °C) in the container is the RVP for the mixture.

API Gravity - The American Petroleum Institute gravity, or API gravity, is a measure of how heavy or light a petroleum liquid is compared to water: if its API gravity is greater than 10, it is lighter and floats on water; if less than 10, it is heavier and sinks.

API gravity is thus an inverse measure of a petroleum liquid's density relative to that of water (also known as specific gravity). It is used to compare densities of petroleum liquids. For example, if one petroleum liquid is less dense than another, it has a greater API gravity. Although API gravity is mathematically a dimensionless quantity it is referred to as being in 'degrees'. API gravity is graduated in degrees on a hydrometer instrument. API gravity values of most petroleum liquids fall between 10 and 70 degrees.

A specific gravity scale developed by the American Petroleum Institute (API) for measuring the relative density of various petroleum liquids, expressed in degrees. API gravity is gradated in degrees on a hydrometer instrument and was designed so that most values would fall between 10° and 70° API gravity. The arbitrary formula used to obtain this effect is: API gravity = (141.5/SG at 60 degF) – 131.5, where SG is the specific gravity of the fluid. https://glossary.oilfield.slb.com/en/Terms/a/api_gravity.aspx

In 1916, the U.S. National Bureau of Standards accepted the Baumé scale, which had been developed in France in 1768, as the U.S. standard for measuring the specific gravity of liquids less dense than water. Investigation by the U.S. National Academy of Sciences found major errors in salinity and temperature controls that had caused serious variations in published values. Hydrometers in the U.S. had been manufactured and distributed widely with a modulus of 141.5 instead of the Baumé scale modulus of 140. The scale was so firmly established that, by 1921, the remedy implemented by the American Petroleum Institute was to create the API gravity scale, recognizing the scale that was actually being used.

Global Warming Potential - A major analytical and policy issue impacting how methane emissions are reported concerns how to translate methane emissions into carbon dioxide equivalent. Methane is a much more potent greenhouse gas than carbon dioxide, although it has a much shorter atmospheric life. Emissions are very often reported in terms of carbon dioxide equivalent (CO2e), which requires an assessment of the global warming potential (GWP) of methane. The most-common metrics are that the radiative forcing impact of methane is 28–36 times that of CO2 measured over a 100–year time horizon, and 84–87 times over a 20-year horizon.

The measurement, reporting and verification of methane emissions using a transparent and globally accepted methodology has become a crucial issue. Given the level of public scrutiny and policy focus on this issue, it has become absolutely vital that the gas industry takes proactive steps to create and implement a global plan both to reduce, but first to accurately document, methane emissions

https://www.oxfordenergy.org/wpcms/wp-content/uploads/2022/01/Measurement-Reporting-and-Verification-of-Methane-Emissions-from-Natural-Gas-and-LNG-Trade-ET06.pdf

BOE - A barrel of oil equivalent (BOE) is a term used to summarize the amount of energy that is equivalent to the amount of energy found in a barrel of crude oil. By encompassing different types of energy resources into one figure, analysts, investors, and management can assess the total amount of energy the firm can access. This is also known as crude oil equivalent (COE).

Many oil companies produce both oil and gas, among other petroleum products, but the unit of measure for each is different. Oil is measured in barrels and natural gas is measured in billions of cubic feet (BCFE). To help facilitate like-for-like comparisons, the industry standardized natural gas production into "equivalent barrels" of oil. One barrel of oil is generally deemed to have the same amount of energy content as 6,000 cubic feet of natural gas. So, this quantity of natural gas is "equivalent" to one barrel of oil. BOE can be compared

with natural gas equivalent, which translates the energy in an amount of oil (or other energy product) into that of gas.

Converting assets to BOE is fairly simple. In terms of volume, oil is represented per barrel, and natural gas is represented per thousand cubic feet (Mcf). There are 42 gallons (approximately 159 liters) in one barrel of oil. The energy contained in a barrel of oil is approximately 5.8 million British thermal units (MBtus) or 1,700 kilowatt-hours (kWh) of energy. This is an approximate measure because different grades of oil have slightly different energy equivalents. One Mcf of natural gas contains approximately one-sixth of the energy of a barrel of oil; therefore, 6,000 cubic feet of natural gas (6 Mcf) have the energy equivalent of one barrel of oil. For large quantities of energy, BOE can be represented at kilo-barrels of oil equivalent (kBOE), which is 1,000 BOE.

https://www.investopedia.com/terms/b/barrelofoilequivalent.asp

2. Oil and gas industry equipment and operations

Computerized maintenance management system (CMMS), also known as computerized maintenance management information system (CMMIS), is a software package that maintains a computer database of information about an organization's maintenance operations. This information is intended to help maintenance workers do their jobs more effectively (for example, determining which machines require maintenance and which storerooms contain the spare parts they need) and to help management make informed decisions (for example, calculating the cost of machine breakdown repair versus preventive maintenance for each machine, possibly leading to better allocation of resources).

Predictive Maintenance and Condition-based Monitoring - Predictive maintenance (PdM) is maintenance that monitors the performance and condition of equipment during normal operation to reduce the likelihood of failures. Also known as condition-based maintenance, predictive maintenance has been utilized in the industrial world since the 1990s.

Yet, in reality, predictive maintenance is much older, although its history is not formally documented. According to Control Engineering, "The start of predictive maintenance (PdM) may have been when a mechanic first put his ear to the handle of a screwdriver, touched the other end to a machine, and pronounced that it sounded like a bearing was going bad."

The goal of predictive maintenance is the ability to first predict when equipment failure could occur (based on certain factors), followed by preventing the failure through regularly scheduled and corrective maintenance.

Predictive maintenance cannot exist without condition monitoring, which is defined as the continuous monitoring of machines during process conditions to ensure the optimal use of machines. There are three facets of condition monitoring: online, periodic and remote. Online condition monitoring is defined as the continuous monitoring of machines or production processes, with data collected on critical speeds and changing spindle positions ("Condition Monitoring of Rotating Machines," Istec International). https://www.reliableplant.com/Read/12495/preventive-predictive-maintenance

Regulators to consider revising natural gas flaring policy | North Dakota News | bismarcktribune.com

Flaring is the controlled burning of natural gas. A gas flare, also known as a **flare stack**, is a gas combustion device used in industrial plants (i.e. petroleum refineries), chemical plants, natural gas processing plants, landfills and at oil and gas production sites, both offshore and onshore. Combustible gases are flared most often due to emergency relief, overpressure, process upsets, startups, shutdowns, and other operational safety reasons. Unplanned flaring happens when an unexpected gas volume has to be addressed as a safety issue. Planned flaring happens when there doesn't exist the pipeline infrastructure to economically transport the natural gas to market. Natural gas that is uneconomical for sale is also flared. Often natural gas is flared as a result of the unavailability of a method for transporting such gas to markets.

Flares are used for the combustion and disposal of combustible gases. The gases are piped to a remote, usually elevated, location and burned in an open flame in the open air using a specially designed burner tip, auxiliary fuel, and steam or air. https://www.eia.gov/tools/glossary/index.php?id=F

The practice of flaring has resulted in the burning of large quantities of gas with the consequent production of huge amounts of carbon dioxide together with sulfur dioxide and nitrous oxide, which have contributed substantially to atmospheric pollution. In order to better understand the scale of the problem, it is sufficient to observe nocturnal images of Earth from space: the gas flaring activity in regions corresponding to the major petroleum-producing areas are a proof that cannot go unnoticed!

Incinerator or enclosed combustor - Flares are not 100% efficient, and some methane (un-combusted) is emitted during flaring. Flares cannot be performance tested to guarantee that they achieve the same efficiency as an incinerator or enclosed combustor. Studies suggest that the efficiency of a flare during windy conditions can be as low as 50%. The many components and complex network of small gathering lines in flare are a source of fugitive emissions.

Incinerators are used when flaring is not a viable option. The combustion efficiency of an incinerator is known to be over 99% which is higher than a flare. Plus, they are more suitable for applications involving carcinogenic gases like BTEX and H2S applications. Incineration of waste gas products may not be a new concept for the

oil and gas industry however, in recent years the design and technology have resulted in optimal performance, increased reliability and reduce capital and operating costs for operators.

An **enclosed combustor** is a newer iteration of the incinerator. The combustion device is completely enclosed except for the combustion air intake and the exhaust discharge. It operates like an incinerator with more restriction to allow it to be able to operate in a reduced spacing capacity. The surfaces exposed to the atmosphere operate below the temperature that would ignite a flammable substance present in the surrounding area. Because of the reduced space capacity all air intakes must be equipped with a flame arresting device as a safety feature to allow the unit to be 10 meters away from wells or operating equipment. https://energynow.com/2021/07/the-differences-between-flares-incinerators-and-enclosed-combustors/

https://www.minesnewsroom.com/news/earth-observation-group-wins-galileo-award-international-dark-sky-association

Natural gas venting and leaks are the discharge of unburned gases into the atmosphere, often carried out in order to maintain safe conditions during the different phases of the treatment process. During venting operations methane, carbon dioxide, volatile organic compounds, sulfur compounds and gas impurities are released. In many cases gases that are being vented could be flared. Flaring (combustion) oxidizes methane into CO2 and water vapor which have a smaller short term environmental impact. Methane has more than 80 times the warming impact of carbon dioxide over the first 20 years after it reaches the atmosphere.

Currently, the above-mentioned practices (flaring and venting) are subject to strong restrictions, both for economic (the gas produced could be sold and consumed rather than wasted!) but especially for environmental reasons. Under the Kyoto Protocol, there are incentives for the construction of plants that have minimum environmental impact and which, at the same time, do not waste precious resources.

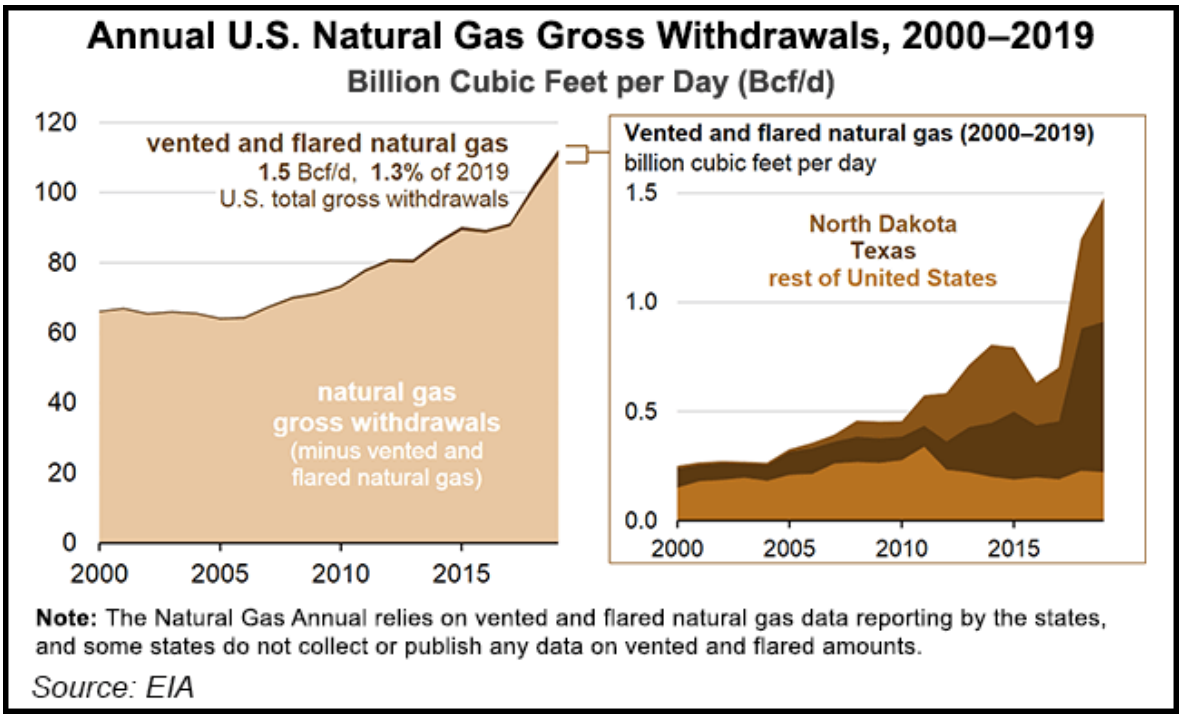

https://www.naturalgasintel.com/lower-48-natural-gas-venting-flaring-reached-record-high-in-2019-eia-says/

The flaring intensity in most of the Permian basin drops from about 5% to 1.6% in the fourth quarter of 2020 - the lowest level for eight years. The huge drop is attributed first, to stalled production of oil and gas for several months during which time the price of oil dropped to zero. https://www.forbes.com/sites/ianpalmer/2021/01/29/profit-and-loss-from-flaring-of-natural-gas-in-permian-basin-wells-of-new-mexico/?sh=4544ca7778bf

In more developed countries, this practice has been almost totally abandoned because it is a waste of an important resource and the infrastructures required to utilize the gas in situ are not difficult to implement. On the contrary, in many developing countries the gas is often not required at the production site and the costs of transportation are very high. For this reason, there are incentives to implement practices that are more feasible and less costly such as, for example, natural gas reinjection into the reservoir to increase its pressure and consequently its efficiency, small-scale natural gas liquefaction plants on the production site, the generation of electricity in situ, the distribution of natural gas to neighboring urban areas, its use for transportation, etc. while costly operations, such as the construction of pipelines, are carried out only when the natural gas extracted justifies the high costs. (www.eniscuola.net/en/argomento/natural-gas1/environment-and-territory1/gas-flaring-and-gas-venting/)

In 2021, the IEA reduced its estimate of average flaring efficiency to from 98 per cent to 92 per cent, which meant that flaring resulted in emissions of more than 500 MT CO2e in 2020.60 Satellite data from Capterio's FlareIntel Portal suggests that for individual countries, the combustion rate for flares may be closer to 90 per cent.61 If 8–10 per cent of flared gas is vented methane, this results in a much higher level of equivalent carbon dioxide emissions.

The Colorado Oil and Gas Conservation Commission (COGCC) has voted to adopt new rules to eliminate the practice of routine flaring at new and existing wells across the state. The rules will be formally adopted after a procedural vote. Routine flaring occurs when operators burn off natural gas produced from oil wells instead of capturing it and selling it or otherwise putting it to beneficial use. Operators in Colorado currently waste nearly

$12 million worth of natural gas annually through venting and flaring, resulting in hazardous air and climate pollution.

This move makes Colorado the first in the lower 48 to put a stop to the practice of routine flaring, and comes as other oil and gas producing states such as New Mexico and Texas face increasing pressure from investors and companies to zero out routine flaring, while recent surveys have found flaring to be an outsized source of climate-warming methane emissions. https://www.edf.org/media/groundbreaking-move-colorado-ends-routine-flaring

Leaks versus Vents - While definitions vary across regulatory jurisdictions, emissions are categorized as **leaks** if they were a result of component malfunction or emissions from equipment with control devices. **Vents**, on the other hand, include pneumatic devices in normal operations, open-ended lines, abnormal emissions from vent sources (e.g. open thief hatches from an uncontrolled tank battery) and other equipment that emit methane by design. (Large-Scale Controlled Experiment Demonstrates Effectiveness of Methane Leak Detection and Repair Programs at Oil and Gas Facilities, Wang, Barlow, Funk, Robinson, Brandt and Ravikumar, 2020)

Emissions from leak sources can be addressed through maintenance programs. Emissions from vent sources must be addressed through different facility designs. Leaks can come from either operational causes or fugitive causes:

Operational emissions - Some flaring and emissions are essential for safety and maintenance reasons, particularly at the start of operations, during repair or in sudden shutdowns. Here the solutions are better design, process optimization or equipment upgrades. But the more important problem globally is routine flaring and super-emitter sites. That means burning off gas that is found when drilling for oil rather than using, reinjecting or selling it – and it points to the crux of the issue which is a lack of infrastructure, regulations, markets and incentives. When these are not in place, it's far simpler and cheaper to flare the gas – or even worse, vent it – than find a way to use or sell it. https://www.ogci.com/talking-transition-putting-a-stop-to-flaring/

Fugitive emissions are leaks and other irregular releases of gases or vapors from a pressurized containment - such as appliances, storage tanks, pipelines, wells, or other pieces of equipment - mostly from industrial activities. In addition to the economic cost of lost commodities, fugitive emissions contribute to local air pollution and may cause further environmental harm. Common industrial gases include refrigerants and natural gas, while less common examples are perfluorocarbons, sulfur hexafluoride, and nitrogen trifluoride.

Most occurrences of fugitive emissions are small, of no immediate impact, and difficult to detect. Nevertheless, due to rapidly expanding activity, even the most strictly regulated gases have accumulated outside of industrial workings to reach measurable levels globally. Fugitive emissions include many poorly understood pathways by which the most potent and long-lived ozone depleting substances and greenhouse gases enter Earth's atmosphere.

Flash Gas – the gas that is released from a pressurized hydrocarbon liquid during depressurization, remains one of the most substantial sources of fugitive GHG and VOC emissions at onshore production sites. Flash Gas emissions remain some of the most complicated to quantify. Compositional analysis of pressurized hydrocarbon liquids are key data sets used to characterize flash gas properties such as gas-to-oil ratio in process simulation models.

Setback Distance - A setback is the absolute minimum distance that must be maintained between any energy facility (for example, a drilling or producing well, a pipeline, or a gas plant) and a dwelling, rural housing development, urban center, or public facility. Setbacks vary according to the type of development and whether the well, facility, or pipeline contains sour gas. Setbacks prevent populated areas from developing too close to energy facilities and energy facilities from getting too close to people. In other words, setbacks provide a buffer

zone between the public and the facility if there is a problem. https://www.aer.ca/providing-information/news-and-resources/enerfaqs-and-fact-sheets/enerfaqs-setbacks

Shut-in The oil or gas well still has capacity, but it is not being produced/extracted. Oil producers sometimes shut-in wells for safety reasons, but by far the most common reason for 'shutting-in' a well is because the cost of extracting the oil or gas is higher than the current market price for the commodity. The state of Colorado Oil and Gas commission defines a shut-in well as a well which is capable of producing but is not presently producing. Reasons for a well-being shut-in may be lack of equipment, market or other.

Abandoned Well Recent studies have investigated methane leakage from abandoned wells in the U.S. The term "abandoned wells" as typically used in published scientific articles and this memo encompasses various types of wells:

- Wells with no recent production, and not plugged. Common terms (such as those used in state databases) might include: inactive, temporarily abandoned, shut-in, dormant, idle.
- Wells with no recent production and no responsible operator. Common terms might include: orphaned, deserted, long-term idle, abandoned.
- Wells that have been plugged to prevent migration of gas or fluids.

Emissions from abandoned oil and gas wells were not included in previous GHGIs. Commenters on previous GHGIs supported including this source, but noted that the current data were limited, and suggested reviewing data that will become available in the future. https://www.epa.gov/sites/default/files/2018-04/documents/ghgemissions_abandoned_wells.pdf

Pneumatic control Valves A control valve is used in the oil and gas industry to regulate the flow rate of the fluid in a pipeline or process (and the related process parameters as pressure, temperature, and level) according to signals managed by a controller.

What kind of valves are used in oil pipelines?

ACTUATED: the valve is actioned via electromechanical devices, called actuators, that may be electric, pneumatic, hydraulic and gas over oil **GATE VALVE**: This type is the most used in piping and pipeline applications. Gate valves are linear motion devices used open and close the flow of the fluid (shutoff valve).

A pneumatic controller means an automated instrument used for maintaining a process condition such as liquid level, pressure, pressure difference and temperature. Based on the source of power, two types of pneumatic controllers are used:

- Natural gas-driven pneumatic controller means a pneumatic controller powered by pressurized natural gas.
- Non-natural gas-driven pneumatic controller means an instrument that is actuated using other sources of power than pressurized natural gas; examples include solar, electric, and instrument air.

Natural gas-driven pneumatic controllers come in a variety of designs for a variety of uses. For the purposes of this Glossary, they are characterized primarily by their emissions characteristics:

Continuous bleed pneumatic controllers are those with a continuous flow of pneumatic supply natural gas to the process control device (e.g., level control, temperature control, pressure control) where the supply gas pressure is modulated by the process condition, and then flows to the valve controller where the signal is compared with the process setpoint to adjust gas pressure in the valve actuator. For the purposes of this glossary, continuous bleed controllers are further subdivided into two types based on their bleed rate:

- Low bleed, having a bleed rate of less than or equal to 6 standard cubic feet per
- hour (scfh).
- High bleed, having a bleed rate of greater than 6 scfh.

Intermittent pneumatic controller means a pneumatic controller that vents non-continuously. These natural gas-driven pneumatic controllers do not have a continuous bleed, but are actuated using pressurized natural gas.

Zero bleed pneumatic controller means a pneumatic controller that does not bleed natural gas to the atmosphere. These natural gas-driven pneumatic controllers are self-contained devices that release gas to a downstream pipeline instead of to the atmosphere. https://www.ourenergypolicy.org/wp-content/uploads/2014/04/epa-devices.pdf

Concept of a single loop-controlled vs cascade controlled tank - To better understand the architecture and benefits of Cascade Control it can help to consider it in the context of an industrial process. Shown on the right is a tank system. A shared header supporting multiple lines allows liquid to flow into the tank. Liquid simultaneously exits through a port at the bottom. Using Single Loop Control the tank level is controlled by adjusting a valve and either increasing or decreasing the rate of fluid that flows into the tank. Whereas the exit stream is predictable, the inlet stream from the header can vary dramatically due to changes in pressure associated with demand from other lines. Due to the process 'dynamics the level controller may be unable to respond adequately to such changes in liquid feed. The slow response can result in a level – whether too high or too low – that is either inefficient or even dangerous.

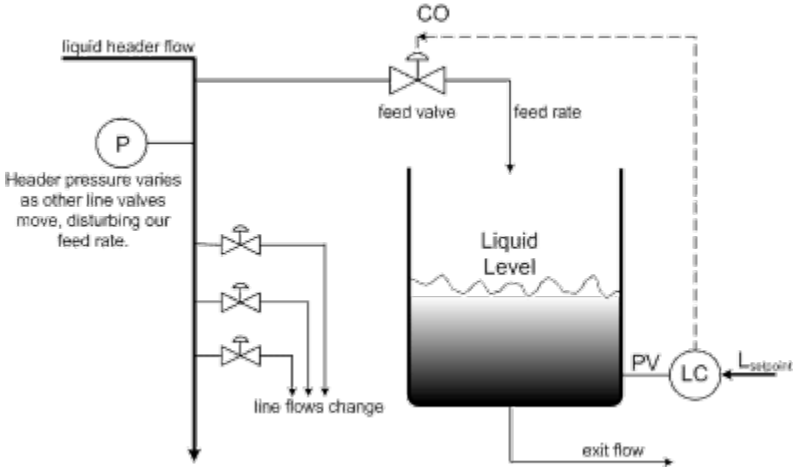

Now consider a similar tank system that employs the Cascade Control architecture. As before the control objective is to maintain level within the tank. However, a second control loop is effectively "nested" within the architecture outlined above to improve control. Here a secondary flow controller is added that uses the Controller Output of the level controller as its Set Point. As level shifts within the tank the slower level

controller establishes a new Set Point for the faster responding flow controller. Because the flow loop is closer to the disturbance it both experiences and rejects any pressure disturbances before they can have an appreciable impact on the tank's level.

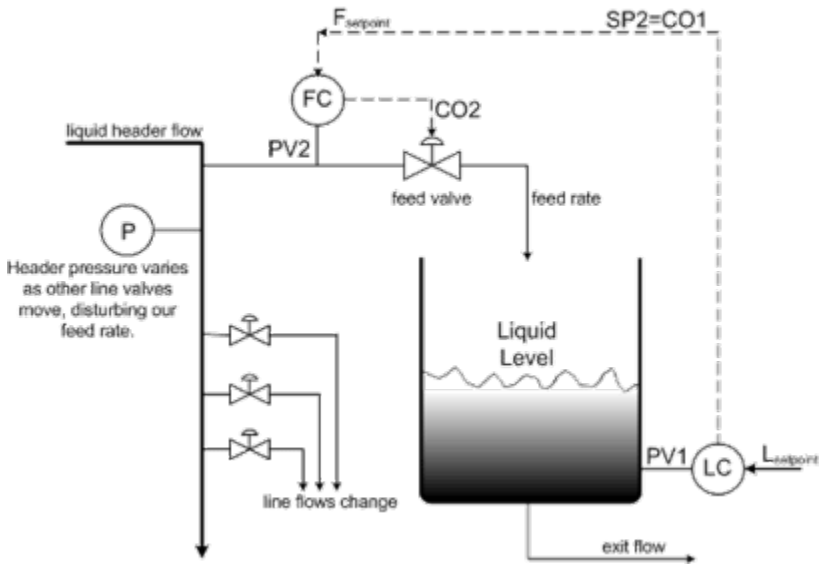

In order to implement Cascade Control it is necessary for the process to have access to a secondary control loop that directly influences the primary loop. What's more the dynamics of that secondary loop must be notably faster than the primary loop – a minimum of 3-5 times faster to be precise. The direct influence and faster speed assure that the secondary loop can readily apply a corrective action capable of minimizing the effects of a disturbance. In the example provided the liquid header flow satisfied both criteria.

While the Cascade Control architecture involves only a single Final Control Element, it does require use of a second sensor and a second PID controller. The added investment in those assets along with the time to configure and tune the controllers represent the sum of the costs. On the other side of the ledger, the benefits are measured in terms of performance gains and the associated economic value.

https://controlstation.com/blog/overview-cascade-control/

Thief Hatch - The purpose of the thief hatch is to work in tandem with the vent valve to minimize the escape of light ends of crude in lease storage tanks by maintaining a pressure on the tank. a vacuum relief function is also standard. the thief hatch permits access to the contents of the tank for sampling and gauging. the vent valve should be set to vent pressure before the thief hatch. https://jayco.org/products-category/jayco-thief-hatch/

Vapor Recovery Unit (VRU)- Vapor recovery is the process of collecting the vapors of gasoline and other fuels, so that they do not escape into the atmosphere. This is often done (and sometimes required by law) at filling stations, to reduce noxious and potentially explosive fumes and pollution. A Vapor Recovery Unit is an engineered compression package, which aims to lower emissions levels coming from the vapors of gasoline or other fuels while recovering valuable hydrocarbons to be sold or reused as fuel onsite. A package for vapor recovery is designed to capture about 95% of Btu-rich vapors, generating many benefits, guaranteeing less air pollution, and recovering gasoline vapors to be used as fuel. https://www.gardnerdenver.com/en-us/garo/applications/vapor-recovery-units#:~:text=What%20Are%20Vapor%20Recovery%20Units%20%28VRU%E2%80%99s%29%3F%20A%20Vapor,to%20be%20sold%20or%20reused%20as%20fuel%20onsite.

A VRU is often used to compress and recover the vapors for return to the process or collection for sale. Vapor recovery can help oil and gas production companies earn additional revenue through the sale of the recovered vapors and simultaneously meet EPA clean air act requirements. Vapor recovery can help oil and gas production companies earn additional revenue through the sale of the recovered vapors and simultaneously meet EPA clean air act requirements. Currently between 7,000 and 9,000 VRU's are installed in the oil and gas sector with an average of four tanks per recovery unit (EPA, October 2006).

https://www.wika.us/solutions_vapor_recovery_oil_and_gas_en_us.WIKA

Separator - The term separator in oilfield terminology designates a pressure vessel used for separating well fluids produced from oil and gas wells into gaseous and liquid components. A separator for petroleum production is a large vessel designed to separate production fluids into their constituent components of oil, gas and water. A separating vessel may be referred to in the following ways: Oil and gas separator, Separator, Stage separator, Trap, Knockout vessel (Knockout drum, knockout trap, water knockout, or liquid knockout), Flash chamber (flash vessel or flash trap), Expansion separator or expansion vessel, Scrubber (gas scrubber), Filter (gas filter). These separating vessels are normally used on a producing lease or platform near the wellhead, manifold, or tank battery to separate fluids produced from oil and gas wells into oil and gas or liquid and gas.

Artificial Lift - Artificial lift is a process used on oil wells to increase pressure within the reservoir and encourage oil to the surface. When the natural drive energy of the reservoir is not strong enough to push the oil to the surface, artificial lift is employed to recover more production. While some wells contain enough pressure for oil to rise to the surface without stimulation, most don't, requiring artificial lift. In fact, 96% of the oil wells in the US require artificial lift from the very beginning. Even those wells that initially posses natural

flow to the surface, that pressure depletes over time, and artificial lift is then required. Therefore, artificial lift is generally performed on all wells at some time during their production life. Although there are several methods to achieve artificial lift, the two main categories of artificial lift include pumping systems and gas lifts.

The most common type of artificial lift pump system applied is **beam pumping**, which engages equipment on and below the surface to increase pressure and push oil to the surface. Consisting of a sucker rod string and a sucker rod pump, beam pumps are the familiar jack pumps seen on onshore oil wells. Above the surface, the beam pumping system rocks back and forth. This is connected to a string of rods called the sucker rods, which plunge down into the wellbore. The sucker rods are connected to the sucker rod pump, which is installed as a part of the tubing string near the bottom of the well. As the beam pumping system rocks back and forth, this operates the rod string, sucker rod and sucker rod pump, which works similarly to pistons inside a cylinder. The sucker rod pump lifts the oil from the reservoir through the well to the surface.

Another artificial lift pumping system, hydraulic pumping equipment applies **a downhole hydraulic pump,** rather than sucker rods, which lift oil to the surface. Here, the production is forced against the pistons, causing pressure and the pistons to lift the fluids to the surface. Similar to the physics applied in waterwheels powering old-fashion gristmills, the natural energy within the well is put to work to raise the production to the surface.

Electric submersible pump systems employ a centrifugal pump below the level of the reservoir fluids. Connected to a long electric motor, the pump is composed of several impellers, or blades, that move the fluids within the well. The whole system is installed at the bottom of the tubing string. An electric cable runs the length of the well, connecting the pump to a surface source of electricity.

An emerging method of artificial lift, **gas lift** injects compressed gas into the well to reestablish pressure, making it produce. Even when a well is flowing without artificial lift, it many times is using a natural form of gas lift. The injected gas reduces the pressure on the bottom of the well by decreasing the viscosity of the fluids in the well. This, in turn, encourages the fluids to flow more easily to the surface. Typically, the gas that is injected is recycled gas produced from the well.

In the US, the majority of wells, 82%, employ a beam pump. Ten percent use gas lift, 4% use electric submersible pumps, and 2% use hydraulic pumps.

https://www.rigzone.com/training/insight.asp?insight_id=315&c_id=#:~:text=Tweet%20Artificial%20lift%20is%20a%20process%20used%20on,artificial%20lift%20is%20employed%20to%20recover%20more%20production.

3. Emission measurement technology

LDAR – Leak Detection and Repair Leak detection and repair (LDAR) refers to U.S. Environmental Protection Agency regulations designed to help reduce volatile organic compounds (VOC) and volatile hazardous air pollutants (VHAP). Current regulatory programs require that companies, especially those in petroleum and chemical industries, follow strict LDAR compliance procedures. Its purpose is to reduce and eliminate unintended emissions of liquids and gases. This practice is essential for plants that work with oil, gas, and chemicals. These companies are required by law to implement a thorough LDAR program.

LDAR is particularly concerned with volatile organic compounds (VOC) and volatile hazardous air pollutants (VHAP). By identifying and repairing leaks, companies can promote safety in the workplace, while reducing product losses. These processes can also contribute to environmental efforts by mitigating the release of harmful substances.

Specific steps on implementing an LDAR program may be specific to each company. Likewise, government regulations will vary across states. Whatever the circumstances are, LDAR programs have five elements in common.

1. **Identifying components**: Each component under the program is identified and assigned an ID. Its corresponding physical location is verified as well. As a best practice, components can be tracked using a barcoding system to be more accurately integrated with the CMMS (Computerized maintenance management system).

2. **Leak definition**: The parameters that define a leak should be clearly understood by relevant personnel. Definitions and thresholds must be well documented and communicated across the teams.

3. **Monitoring components**: Each identified component should be routinely monitored for signs of leaks. The frequency of checking, also called the monitoring interval, should be set accordingly.

4. **Repairing components**: Leaking components should be repaired within a set amount of time. The first repair attempt is ideally done within 5 days after the leak is detected. For delayed repair work due to any planned downtime, a documented explanation should be provided.

5. **Record keeping**: All tasks and activities that are performed and scheduled are recorded. Updating the activity status on the CMMS helps to keep track.

https://www.onupkeep.com/maintenance-glossary/leak-detection-and-repair

https://www.infrared-camera-blog.com/the-best-infrared-cameras-for-optical-gas-imaging-ogi/

LACT meter - Lease Automatic Custody Transfer Units, or LACT Units as they are commonly abbreviated are metering equipment designed to accurately gauge the volume and quality of crude oil as it changes custody from one party to another. LACT Units provide the means of correctly determining compensation, which makes them very important to both parties. A LACT Unit is only as good as the meters and parts which comprise it. Different types of LACT Units use different types of flowmeters to accurately measure the custody transfer of the crude oil. The type of meter the system uses will typically depend on a variety of characteristics and considerations about the well. A LACT Unit's flowmeter is a good fit for the particular well when it is

designed to successfully overcome the primary hurdles at that well. https://setxind.com/upstream/a-closer-look-at-lact-unit-meters-and-components/

Thermal Imaging cameras - **Infrared (IR)** thermal imaging cameras are commonplace in the oil and gas industry. For years, companies have used them for a number of tasks such examining pipe integrity within process equipment. Recently, though, a highly specialized version of these cameras has made its way into the marketplace for a new application—the monitoring of volatile organic compounds (VOCs), such as methane, being vented into the atmosphere. **Forward-looking infrared (FLIR)** cameras are one common type of IR thermal imaging camera in use. https://jpt.spe.org/optical-gas-imaging-new-solution-methane-detection

Laser absorption spectrometry (LAS) - There is a range of methods called laser absorption spectroscopy, where laser light is used to precisely measure absorption features of substances. The purpose of such kinds of spectroscopy is frequently to find out details on such substances, but in other cases one utilizes known details of substances for other purposes. For example, laser absorption spectroscopy is often used for realizing optical frequency standards, e.g. by stabilizing the wavelengths of a laser to a precisely defined absorption transition.

Direct Absorption Spectroscopy - A frequently used method involves that a tunable narrow-linewidth laser (frequently a single-frequency laser) is tuned through some wavelength range, and the light absorption in some sample is measured as a function of that wavelength. The absorption is often obtained by measuring (a) the optical power of a laser beam which is transmitted through the investigated medium and (b) the optical power of a reference beam (obtained with a beam splitter between the laser and the investigated medium), which is not affected by the medium. That way, one can largely avoid that power fluctuations of the laser (intensity noise) affect the results. In many cases, one uses a balanced photodetector, essentially measuring the difference between two optical powers (rather than their ratio). https://www.rp-photonics.com/laser_absorption_spectroscopy.html

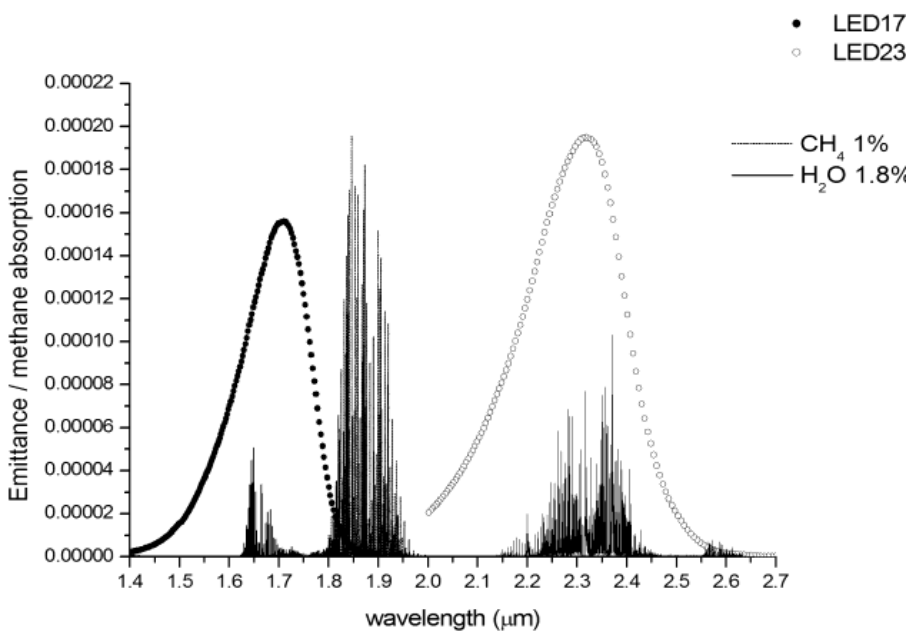

https://www.researchgate.net/figure/LED-spectra-and-methane-and-water-absorption-bands_fig1_298904432

4. Process control

Calibration - The comparison of a measuring device (an unknown) against an equal or better standard.

Drift - A systematic change in reading or value that occurs over long periods. Changes in ambient temperature, component aging, contamination, humidity and line voltage may contribute to drift.

An **alert** is a notification that a particular event (or series of events) has occurred, which is sent to responsible parties for the purpose of spawning action. In general, an **incident** is a human-caused, accidental event that leads to (or may lead to) a significant disruption of business. An **event** in general terms is an observed change to the normal behavior of a system, environment, process, workflow, or person. Events can control peripheral equipment or processes, or act as an input for another control or control loop.

Alarm – A **deviation alarm** warns that a process has exceeded or fallen below a certain range around the set or reference point. Alarms can be referenced at a fixed number of degrees, plus or minus, from an established reference point. A **process alarm** warns that process values exceed the process alarm setting. A fixed value independent of set point. A set point is the desired or target value for an essential variable, or process value of a system.

Alarm Management: When every event triggers a notification, operational staff can become overwhelmed by the volume of non-actionable notifications (i.e., corresponding to operational emissions). When significant alerts trigger notifications, operators are only made aware of significant issues, which makes addressing these issues easier. In short, notifications are the messages that bring events, alerts, alarms, and incidents to the attention of the appropriate staff.

Supervisory control and data acquisition (**SCADA**)– SCADA refers to ICS (industrial control systems) used to control infrastructure processes (water treatment, wastewater treatment, gas pipelines, wind farms, etc), facility-based processes (airports, space stations, ships, etc.) or industrial processes (production, manufacturing, refining, power generation, etc.).

The following subsystems are usually present in SCADA systems:

- The apparatus used by a human operator; all the processed data are presented to the operator
- A supervisory system that gathers all the required data about the process
- Remote Terminal Units (RTUs) connected to the sensors of the process, which helps to convert the sensor signals to the digital data and send the data to supervisory stream.
- Programmable Logic Controller (PLCs) used as field devices
- Communication infrastructure connects the Remote Terminal Units to supervisory system.

Generally, a SCADA system does not control the processes in real time – it usually refers to the system that coordinates the processes in real time.

SCADA refers to the centralized systems that control and monitor the entire sites, or they are the complex systems spread out over large areas. Nearly all the control actions are automatically performed by the **remote terminal units** (RTUs) or by the **programmable logic controllers** (PLCs). The restrictions to the host control functions are supervisory level intervention or basic overriding. For example, the PLC (in an industrial process) controls the flow of cooling water, the SCADA system allows any changes related to the alarm conditions and set points for the flow (such as high temperature, loss of flow, etc) to be recorded and displayed.

Data acquisition starts at the PLC or RTU level, which includes the equipment status reports, and meter readings. Data is then formatted in such way that the operator of the control room can make the supervisory decisions to override or adjust normal PLC (RTU) controls, by using the HMI.

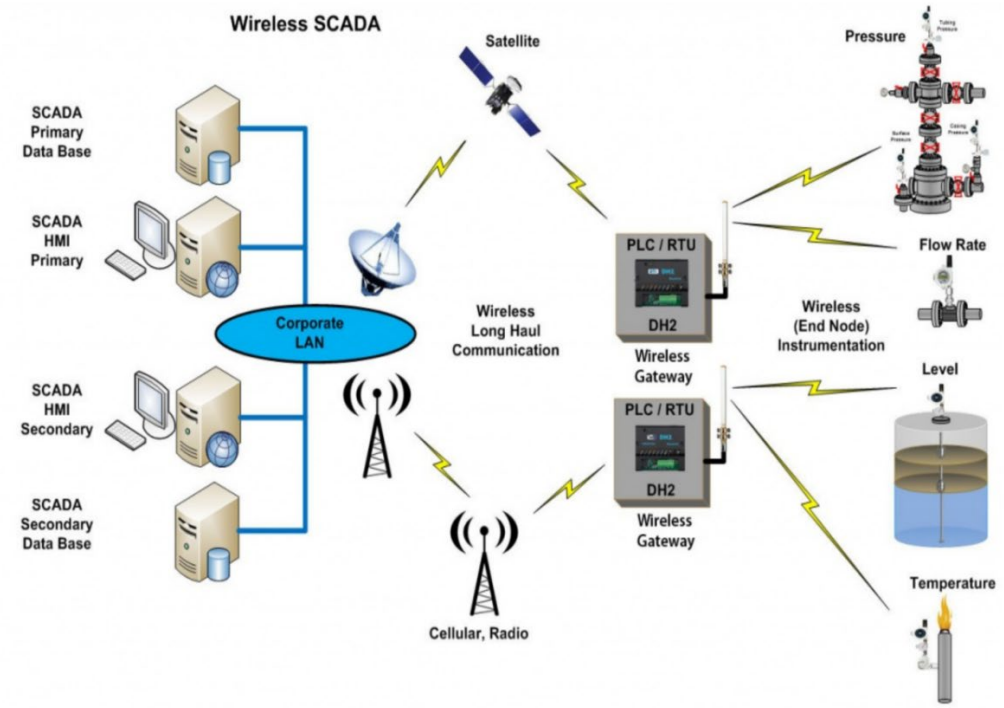

https://www.onupkeep.com/learning/maintenance-tools/scada-system

Human Machine Interface (HMI) - The HMI, or Human Machine Interface, is an apparatus that gives the processed data to the human operator. A human operator uses HMI to control processes. The HMI is linked to the SCADA system's databases, to provide the diagnostic data, management information and trending information such as logistic information, detailed schematics for a certain machine or sensor, maintenance procedures and troubleshooting guides.

The information provided by the HMI to the operating personnel is graphical, in the form of mimic diagrams. This means the schematic representation of the plant that is being controlled is available to the operator. For example, the picture of the pump that is connected to the pipe shows that this pump is running and it also shows the amount of fluid pumping through the pipe at the particular moment. The pump can then be switched off by the operator. The software of the HMI shows the decrease in the flow rate of fluid in the pipe in the real time. Mimic diagrams either consist of digital photographs of process equipment with animated symbols, or schematic symbols and line graphics that represent various process elements.

HMI package of the SCADA systems consist of a drawing program used by the system maintenance personnel or operators to change the representation of these points in the interface. These representations can be as simple as on-screen traffic light that represents the state of the actual traffic light in the area, or complex, like the multi-projector display that represents the position of all the trains on railway or elevators in skyscraper. http://www.scadasystems.net/

5. Data analysis techniques

Time-Series analytics - Time series analysis is a statistical method to analyze the past data within a given duration of time to forecast the future. It comprises of ordered sequence of data at equally spaced interval. Time series data collected over different points in time breach the assumption of the conventional statistical model as correlation exists between the adjacent data points. This characteristic of the time series data breaches is one of the major assumptions that the adjacent data points are independent and identically distributed. This gives rise to the need of a systematic approach to study the time series data which can help us answer the statistical and mathematical questions that come into the picture due to the time correlation that exists.

Time series analysis holds a wide range of applications is it statistics, economics, geography, bioinformatics, neuroscience. The common link between all of them is to come up with a sophisticated technique that can be used to model data over a given period of time where the neighboring information is dependent. In time series, Time is the independent variable and the goal is forecasting. https://www.educba.com/time-series-analysis/

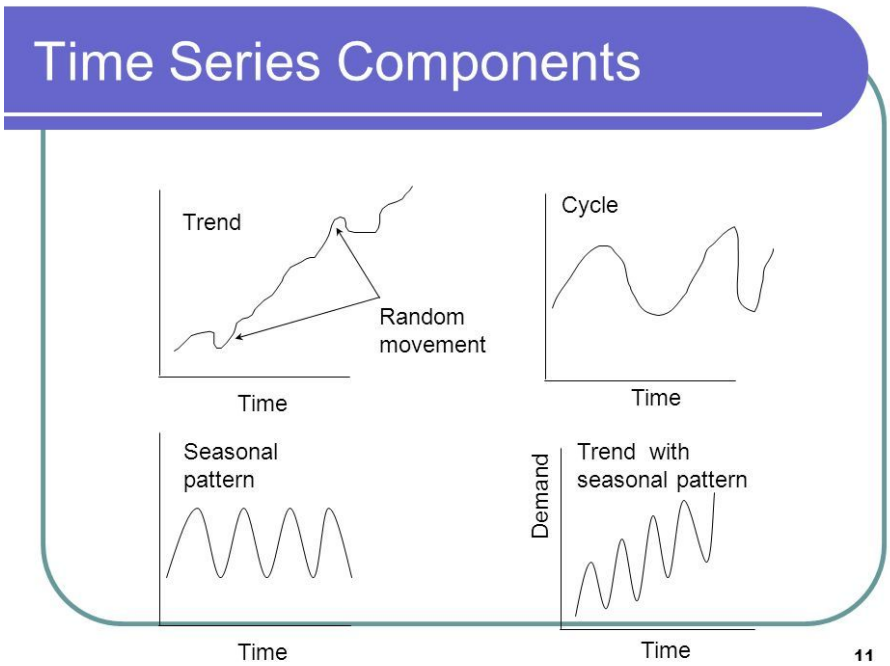

https://devopedia.org/images/article/107/7999.1532720149.jpg

Geospatial analytics - Geospatial analytics gathers, manipulates and displays geographic information system (GIS) data and imagery including GPS and satellite photographs. Geospatial data analytics rely on geographic coordinates and specific identifiers such as street address and zip code. They are used to create geographic models and data visualizations for more accurate modeling and predictions of trends.

6. Emissions reporting policy and practices

Corporate Sustainability Reporting Directive (CSRD) - In spring 2021, the European Commission presented its proposal for the Corporate Sustainability Reporting Directive. The CSRD is a reviewed and

revised version of the Non-Financial Reporting Directive (NFRD) and promotes the disclosure of sustainability related parameters in companies 'reporting practice. One of its main building blocks: double materiality. This involves that companies report on the effect of climate change on their companies on the one hand, while reporting on the impact of the company's activities on environmental and social aspects. https://hedgehogcompany.nl/csrd-ghg-protocol/

Green House Gas Protocol (GHG Protocol) - The Greenhouse Gas protocol provides standards for both the public and the private sector about measuring greenhouse gasses, such as carbon dioxide, methane, nitric oxide hydrofluorocarbons and other trace gases. Through its standards, it creates a common ground for sustainability certifications and reporting systems. Because of this standardization, it allows companies to thoroughly understand their greenhouse gas emissions and creates collective understanding of the problem. Moreover, it allows companies to critically think about appropriate actions that should be taken to fight these emissions. When a company understands its emissions and has taken steps to reduce these, it enables the company to make environmental claims towards stakeholders. The Greenhouse Gas Protocol (GHGP) was established through a partnership between the World Resources Institute and the Business Council for Sustainable Development. The GHGP is divided into 3 scopes:

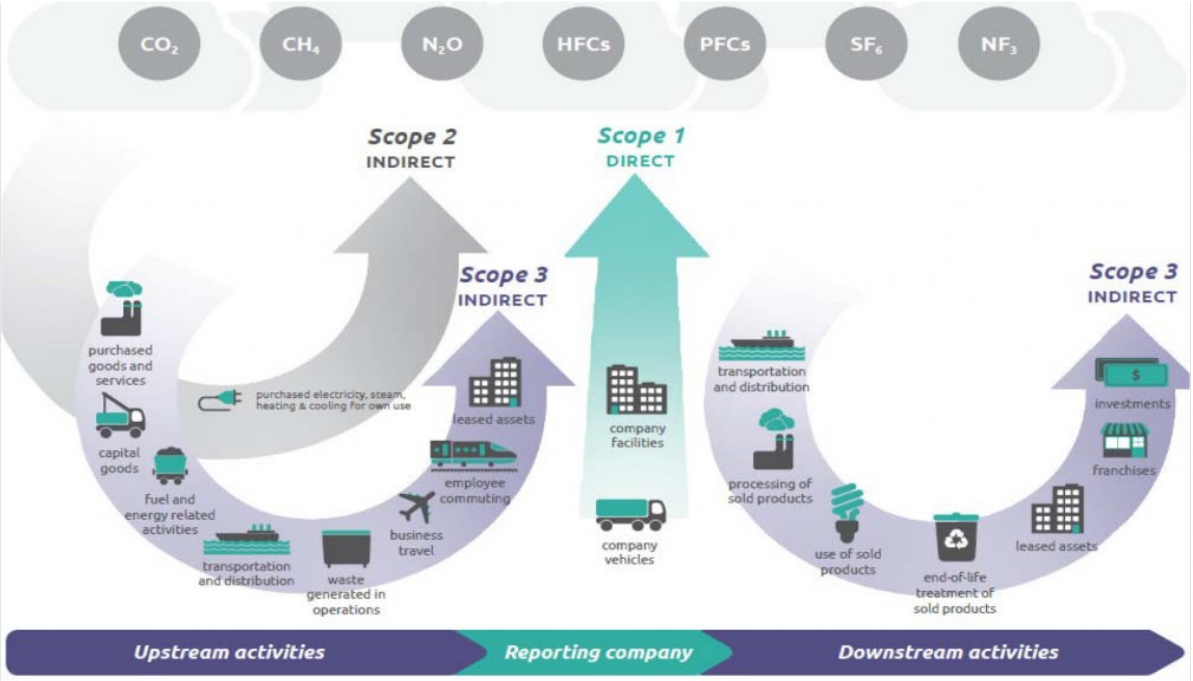

Scope 1 covers all direct emissions. The company or organization itself is responsible for these emissions. For example, the CO2 emissions which are emitted due to the combustion of diesel from machines on the production location of the company. An exception is the combustion, fermentation, or gasification of biomass.

Scope 2 covers all greenhouse gas emissions that are emitted from the production of energy. For example, grey electricity production emits CO2. This means scope 2 is not about emissions on location, but about the emissions produced at the location where the electricity is produced needed by the company or organization.

Scope 3 covers all GHG emissions that are not covered by scope 1 or 2 and needs to cover the entire value chain of the company or the organization. This scope often represents the largest source of emissions

and covers both upstream and downstream activities of the organization. Examples of these are; capital goods, business travels, purchased goods and services and franchises.

QMRV - (quantification, monitoring, reporting and verification) is a record keeping protocol of greenhouse gas (GHG) emissions at natural gas production hubs. The motive behind the QMRV goal to interact with the natural gas producers is gaining better knowledge of the upstream GHG emissions and accelerating the adoption of sophisticated monitoring technology and methods.

Emissions Factors - Emissions factors have long been the fundamental tool in developing national, regional, state, and local emissions inventories for air quality management decisions and in developing emissions control strategies. More recently, emissions factors have been applied in determining site-specific applicability and emissions limitations in operating permits by federal, state, local, and tribal agencies, consultants, and industry.

An emissions factor is a representative value that attempts to relate the quantity of a pollutant released to the atmosphere with an activity associated with the release of that pollutant. These factors are usually expressed as the weight of pollutant divided by a unit weight, volume, distance, or duration of the activity emitting the pollutant (e.g., kilograms of particulate emitted per megagram of coal burned). Such factors facilitate estimation of emissions from various sources of air pollution. In most cases, these factors are simply averages of all available data of acceptable quality, and are generally assumed to be representative of long-term averages for all facilities in the source category (i.e., a population average).

The general equation for emissions estimation is:

$$E = A \times EF \times (1-ER/100)$$

where:

- E = emissions;
- A = activity rate;
- EF = emission factor, and
- ER =overall emission reduction efficiency

https://www.epa.gov/air-emissions-factors-and-quantification/basic-information-air-emissions-factors-and-quantification

Methane Intensity - Methane emissions intensity is a measure of methane emissions relative to natural gas throughput. Investors, customers, environmental groups, and other stakeholders are increasingly requesting information on natural gas company performance based on methane emissions intensity. While intensity is becoming a preferred approach for communicating methane emissions data throughout the industry, there is no standard methodology for calculating it. This is an obstacle to managing, tracking, and more transparently communicating current efforts to reduce methane emissions. https://www.aga.org/contentassets/c87fc10961fe453fb35114e7d908934f/ngsi_methaneintensityprotocol_v1.0_feb2021.pdf

Responsible Gas - The natural gas industry has seized upon consumers' environmental consciousness and is beginning to market "responsibly produced" gas - at a premium price. The first public transaction involving gas certified under the Responsible Gas program by Independent Energy Standards Corp. took place in September 2018 when Southwestern Energy sold an undisclosed volume to local utility company New Jersey Natural Gas. The transaction represents part of a small but growing niche of the natural gas market, in which end-users can

specify that they want to purchase gas with certain attributes, such as gas produced without hydraulic fracturing or gas produced with low levels of methane emissions.

Under certifications programs, gas wells and related facilities are rated based on four key metrics: impacts to water, impacts to air and impacts to land, as well as community and social considerations. Wells are scored on a zero-to-150 scale, with wells scoring 125 to 150 given a Platinum rating, which comprises the top 10% of operators. The next tier is Gold, which includes wells scoring 100 to 125 and includes the top quartile of producers. Wells scoring 75 to 100 fall into the Silver category, and those that rate below 75 are classified as actively improving. https://www.spglobal.com/platts/en/market-insights/latest-news/natural-gas/040519-us-industry-turns-to-responsible-natural-gas-to-fetch-premium-price

Third-party Verification - Third-party reviews check the veracity of both financial and non-financial reports so your readers and benchmarking organizations can trust that your reports are accurate. This additional step can also identify issues in your reporting methodology and underlying data, which can result in substantial improvements to your broader ESG program. Examples of this verification process include Project Canary's TrustWell process (https://www.projectcanary.com/operationalize/) and RMI's MiQ process (https://miq.org/about/). GTI is sponsoring a broad effort to establish gas measurement and verification protocols in a program called Veritas (https://www.gti.energy/veritas-a-gti-differentiated-gas-measurement-and-verification-initiative/)

Many of the terms are used inconsistently, which can cause confusion. While they all describe validation processes, they differ when it comes to precision and coverage. So let's first get these definitions straight:

> **Assurance**: a data check process that requires the same methodologies and standards as financial data and must be performed by an accredited auditor.
>
> **Verification**: a data check process used when reviewing non-financial data and collection processes compared against predefined criteria and must be performed by an accredited auditor.
>
> **Alignment**: an established methodology (e.g. a rationale for how it was prepared, what was included and excluded, and why these decisions were made) that a report follows. https://www.measurabl.com/how-assurance-and-verification-help-your-sustainability-efforts/

ESG Investing - ESG investing is undoubtedly one of the fastest-growing trends in finance and alternative data over the past few years. ESG stands for Environmental, Social, and Governance and is an evolution of socially responsible investing (SRI)—an investment strategy that seeks both financial returns as well as a positive social and environmental impact. By integrating environmental, social, and governance factors into valuing a company, the goal is to enhance traditional analysis by identifying risks and opportunities that go beyond fundamental metrics. https://www.mlq.ai/esg-investing/

What is ESG Investing?

ESG stands for environmental, social and corporate governance, which represent three of the main criteria for investors to quantify and evaluate a company's level of sustainability. Let's look at each of these three criteria in more detail.

Environmental

Environmental factors that go into a company's ESG score attempt to quantify the impact—positive or negative—that their operations have on the planet. A few of the core sub-factors that go into evaluating a company's environmental impact highlighted by Motley Fool include:

- Carbon footprint

- Water consumption
- Water disposal
- Recycling practices
- Climate change policies
- Use of renewable energy
- Relationship with regulatory bodies such as the EPA (Environmental Protection Act)

Social

Social factors that go into a company's ESG rating are related to how the company addresses issues concerning customers, employees, suppliers, and so on. A few of the sub-factors that go into social ESG scores include:

- Employee compensation, benefits, and turnover
- Employee training
- Employee safety
- Diversity and inclusion in hiring and promotion practices
- Ethical supplier and supply chain sourcing
- Customer ratings and feedback
- Government lobbying efforts
- Consumer protection, such as recalls, lawsuits, and regulatory actions

Governance

Finally, factors that go into a company's governance rating include topics such as business ethics, quality of management, and the board's independence. Specifically, a few examples of governance metrics include:

- Ethical business practices and policies
- Executive compensation levels
- Addressing conflicts of interest at the board or executive level
- Shareholder voting rights for nominating board candidates
- Transparency between shareholders and the executive team
- History of legal issues with shareholders
- History with SEC or other regulatory bodies